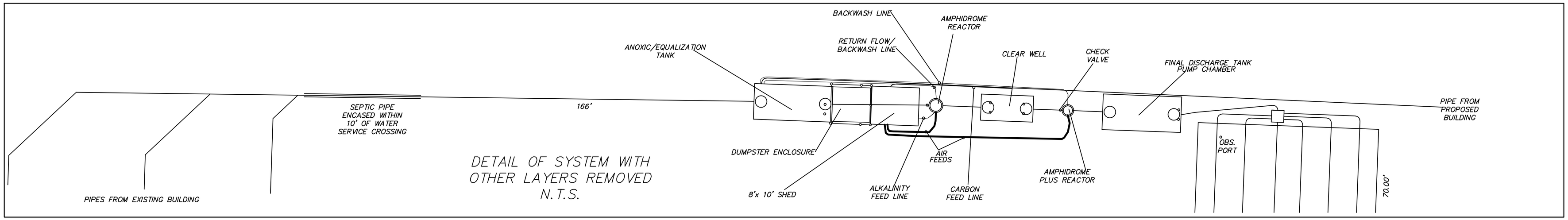

DETAIL OF SYSTEM WITH OTHER LAYERS REMOVED
N.T.S.

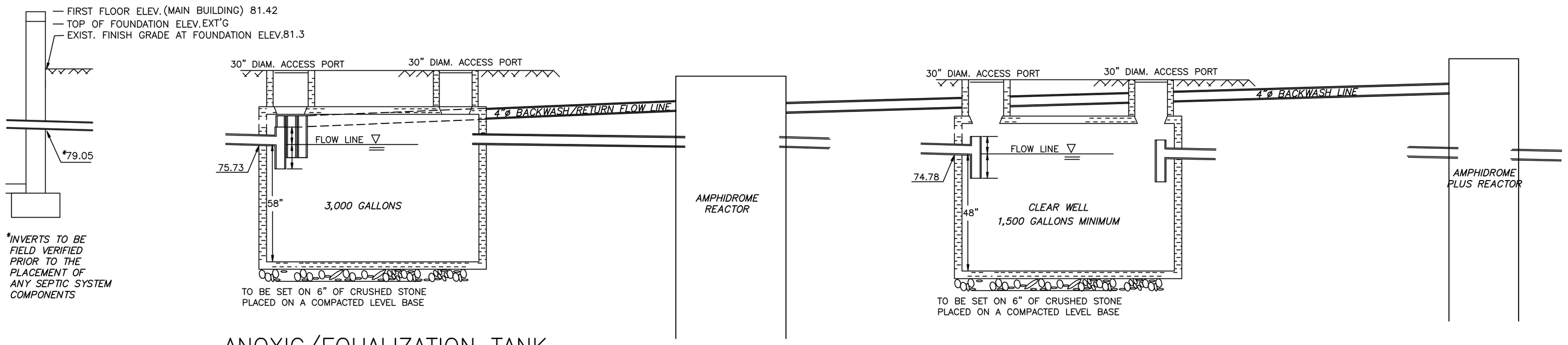

ANOXIC/EQUALIZATION TANK
N.T.S.

NOTES:
- ALL COVERS SHALL BE MARKED WITH A MAGNETIC MARKING TAPE.

THE PARTITIONED TANK MAY NOT BE NECESSARY IF DEEMED SO BY OTHERS.

THE EXACT DETAILS OF THE "AMPHIDROME" SYSTEM SHALL BE PROVIDED BY OTHERS

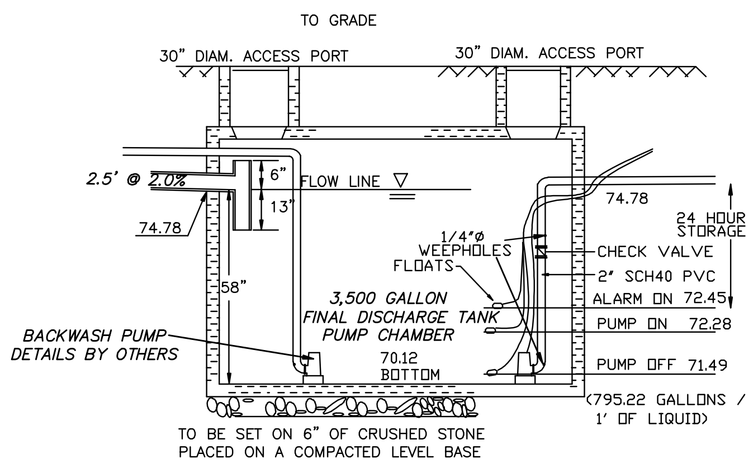

PUMP CHAMBER DETAILS
N.T.S.

USE A .5 HP GOULDS PUMP OR APPROVED EQUIVALENT

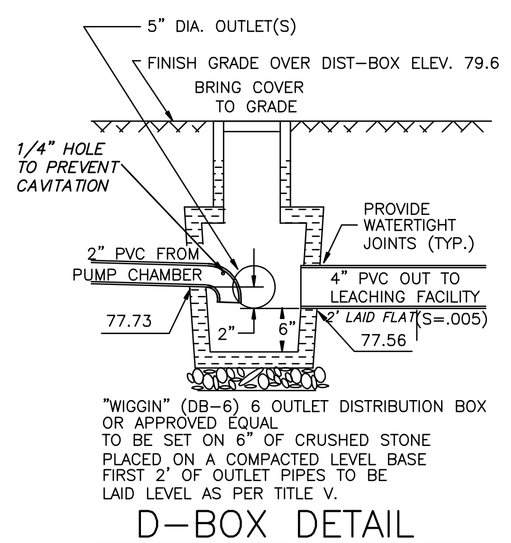

D-BOX DETAIL
N.T.S.

INSTALL OBSERVATION PORTS ACCORDING TO TOWN OF BOURNE STANDARDS.

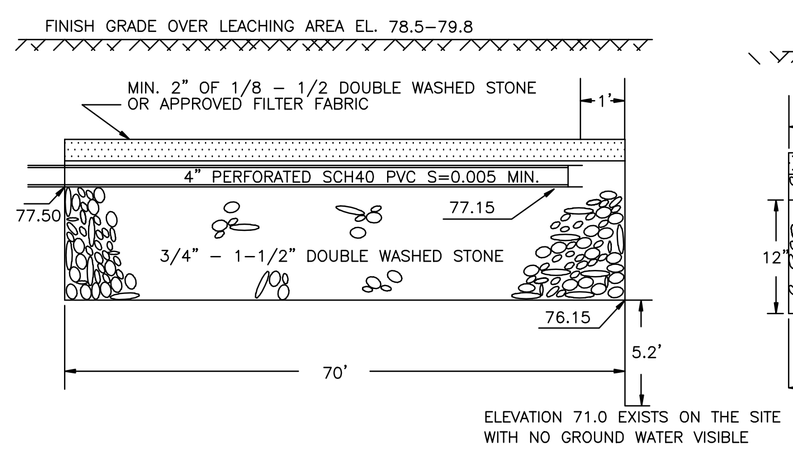

LEACH FIELD PROFILE
N.T.S.

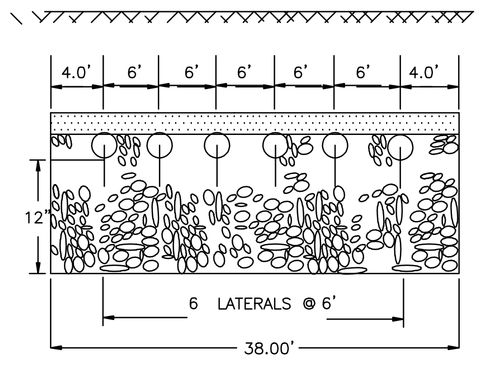

END VIEW
N.T.S.

TEST PIT DATA

INSPECTOR: C.COFFIN
DATE: JULY 3, 2014

PERFORMED BY: J.E. CAULEY P.E.

TEST PIT # : 1	TEST PIT # : 2	TEST PIT # : 3	TEST PIT # : 4
EL. TOP = 103.4	EL. TOP = 102.5	EL. TOP = 101.2	EL. TOP = 101.9
OBS. WATER EL. = NONE	OBS. WATER EL. = NONE	OBS. WATER EL. = NONE	OBS. WATER EL. = NONE
PERC RATE = < 2 MPI	PERC RATE = < 2 MPI	PERC RATE = < 2 MPI	PERC RATE = < 2 MPI
0" O/A STRIPPED	0"	0" FILL	0"
6" B LOAMY SAND 10YR 5/6	B LOAMY SAND 10YR 5/6	30" B LOAMY SAND 10YR 5/6	B LOAMY SAND 10YR 5/6
42" C MEDIUM SAND 10YR 6/4	42" C MEDIUM SAND 10YR 6/4	46" C MEDIUM SAND 10YR 6/4	52" C MEDIUM SAND 10YR 6/4
120"	90"	116"	120"

GENERAL NOTES:

1. NO HEAVY EQUIPMENT OVER SYSTEM.
2. DISTRIBUTION BOX TO BE PRECAST REINFORCED CONCRETE UNITS, WITH AN H-20 CAPACITY.
3. ALL SYSTEM COMPONENTS SHALL BE INSTALLED IN ACCORDANCE TO REVISED TITLE V OF THE STATE ENVIRONMENTAL CODE, MINIMUM REQUIREMENTS FOR THE SUBSURFACE DISPOSAL OF SANITARY SEWAGE.
4. ANY CHANGES TO THIS PLAN MUST BE APPROVED BY THE BOARD OF HEALTH AND THE ENGINEER.
5. AT THE COMPLETION OF CONSTRUCTION, PRIOR TO BACKFILLING, THE BOARD OF HEALTH AND ENGINEER SHALL BE NOTIFIED FOR INSPECTION AND LOCATION FOR AS BUILT PLAN PREPARATION.
6. PITCH ALL SEWER LINES 1/4" PER FOOT UNLESS INDICATED OTHERWISE.
7. INSTALLER TO LOCATE ALL UTILITIES PRIOR TO CONSTRUCTION.
8. INSTALLER TO PROVIDE AT LEAST ONE OBSERVATION PORT.
9. INSTALLER TO CONTACT THIS FIRM TO CONFIRM SOIL CONDITIONS DURING SYSTEM INSTALLATION.
10. ALL SEPTIC SYSTEM COMPONENTS TO BE CONFIRMED BY SURVEY. INCLUDING BUT NOT LIMITED TO, THE BOTTOM OF LEACHING AREA, SYSTEM COMPONENT LOCATIONS AND PIPE INVERTS.

SEPTIC SYSTEM NOTES

1. The contractor shall verify all existing inverts pror to the placement of any septic system components.
2. Where required the contractor will remove all loam, subsoil and other unsuitable material in the area beneath and for 2 feet on all sides of the leaching facility. The contractor shall replace all unsuitable material with clean coarse sand free from clay, fines or other unsuitable material. Replacement material to have an inplace perc rate of two minutes or less.
3. Subsurface septic system components shall not be back filled or otherwise concealed from view until a final inspection has been conducted by the approving authority and the ENGINEER.
4. All covers shall be marked with magnetic marking tape.

CAPACITY REQUIRED

BUILDING #1
1st FLOOR:
EXSTING USE: (TO REMAIN THE SAME)
3 DOCTORS @ 250 GALS = 750 GPD
3,500 S.F. PROFESSIONAL OFFICE:
3,500 ÷ 1,000 x 75 = 262.5 GPD
2nd FLOOR:
9,100 S.F. - 455 S.F.(HALLWAYS)
8,645 S.F. PROFESSIONAL OFFICE:
8,654 ÷ 1,000 x 75 = 648.38 GPD

BUILDING #2
1,500 S.F. PROFESSIONAL OFFICE:
1,500 ÷ 1,000 x 75 = 112.5 GPD
(200 GAL MIN.)

TOTAL:1,012.5 + 650 + 200=1,862.5 GPD

CAPACITY PROVIDED

SYSTEM SIZE: 38x70 = 2,660 S.F.
2,660 x .74 = 1,968.4 GPD

FIELD LAYOUT

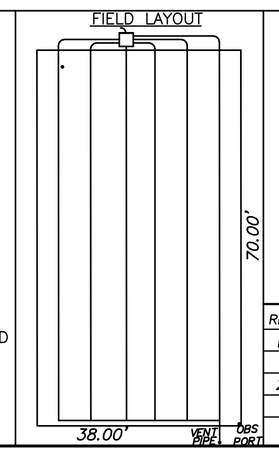

REVISIONS

NO.	DATE	DESCRIPTION	BY
1	10/30/14	REVISE CALCS./DETAIL OF SYS	JDR
2	12/01/15	AMPHIDROME SYSTEM	JDR

SITE & SEPTIC DESIGN PLAN

PREPARED FOR: *PAESANO REALTY TRUST*
123 WATERHOUSE ROAD
BOURNE, MASS.

LOCATED AT: 123 WATERHOUSE ROAD
BOURNE, MASSACHUSETTS

DATE	SCALE	DRAWN	CHECKED	JOB NO.	DWG. NO.
02/25/15	N.T.S.	JDR		PAESANO-2014	3 OF 3

Warwick & Associates Inc.
63 County Road Box 801
North Falmouth, Mass 02556
(508) 563 - 7777