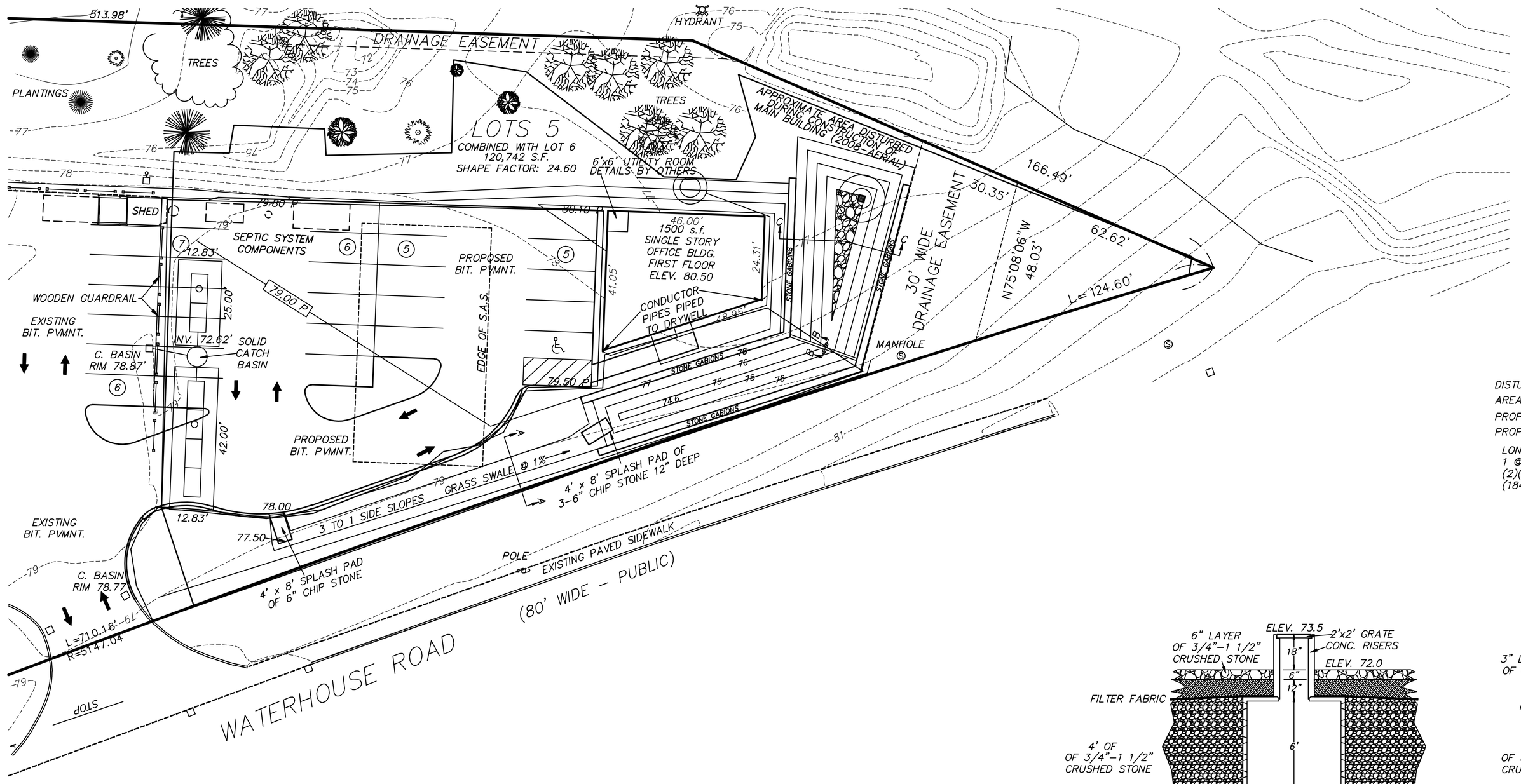

DISTURBED AREAS:

AREA DISTURBED AS OF APRIL 2008: 25,436 S.F.

PROPOSED DISTURBED AREA DURING CONSTRUCTION: 18,623 S.F.

PROPOSED PERMANENTLY ALTERED AREA: 14,017 S.F.

LONG TERM ACCEPTANCE RATE:
1 @ 6'ø x 6' DEEP LEACHING PIT WITH 4' OF STONE
$(2)(3.14)(7)^2(6) = 1846$ S.F.
$(1846 \text{ S.F.})(3.6 \text{ IN. PER HOUR})\frac{1}{12} = 553$ C.F./HR.

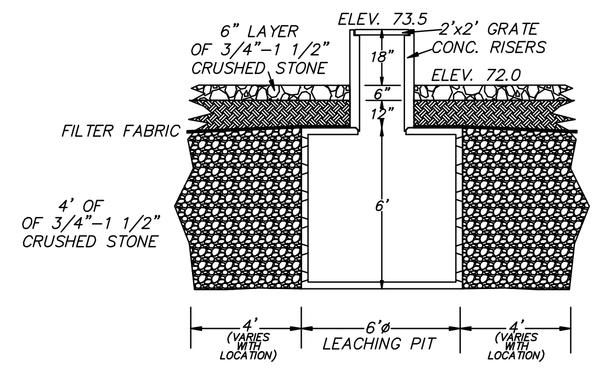

CROSS SECTION OF WICK
N.T.S.

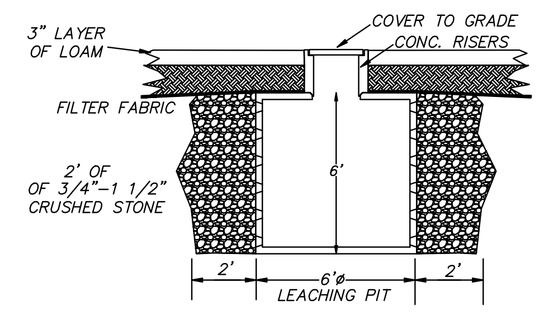

CROSS SECTION OF DRYWELL
N.T.S.

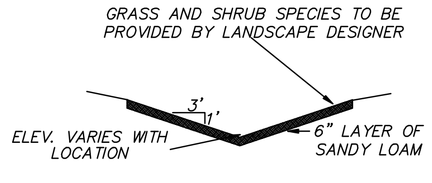

CROSS SECTION A-A
N.T.S.

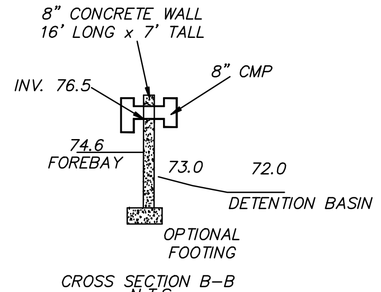

CROSS SECTION B-B
N.T.S.

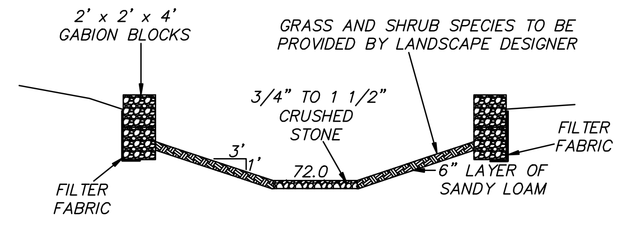

CROSS SECTION C-C
N.T.S.

DRAINAGE DETAIL SHEET

FOR

PAESANO REALTY TRUST
123 WATERHOUSE ROAD
BOURNE, MASS.

Scale: 1"=20' Date: 02/25/15

GRAPHIC SCALE

20 0 10 20 40 80

(IN FEET)
1 inch = 20 ft.

"PLAN REVISIONS"

NO.	DATE	DESCRIPTION	BY	PA/PR
1	07/16/15	ADD WICK TO DETENTION AREA	JDR	
2	11/30/15	STONE GABIONS/3 TO 1 SLOPE	JDR	
3	12/01/15	AMPHIDROME SYSTEM	JDR	

DRAWN BY: JDR	DATE: 02/25/15
CHECKED BY:	SHEET 2 OF 3
P:\Land Projects 2004\PAESANO\dwg\PAESANASBUILT.DWG	

Warwick & Associates Inc.
63 County Road Box 801
North Falmouth, Mass 02556
(508) 563 - 7777