Environmental Construction Plan
DRAFT

Mid-Cape Main Replacement Project
Yarmouth, Dennis, Harwich and Brewster, MA

Prepared by National Grid
40 Sylvan Road
Waltham, MA 02451

Table of Contents

TABLE of CONTENTS

Section Page

1.0 INTRODUCTION 1-1
2.0 PROJECT DESCRIPTION 2-1
2.1 PROJECT PURPOSE 2-1
2.2 CONSTRUCTION SCHEDULE 2-2
3.0 SUPERVISION AND INSPECTION 3-1
3.1 ENVIRONMENTAL ORGANIZATION AND COMMUNICATION PROCEDURES 3-1
3.2 ENVIRONMENTAL INSPECTOR RESPONSIBILITIES 3-1
3.2.1 Erosion and Sedimentation Control; Right-of-Way Restoration 3-1
3.2.2 Training 3-1
3.2.3 Record and Documentation Control 3-2
3.2.4 SPCC Oversight 3-2
3.3 ACCIDENTAL DISCOVERY PLAN – ARCHAEOLOGICAL SITES 3-3
3.3.1 Introduction 3-3
3.3.2 Procedures 3-3
3.3.3 List of Contacts 3-5
4.0 CONSTRUCTION SEQUENCE SUMMARY 4-1
4.1 CONSTRUCTION METHODOLOGY 4-1
4.2 ESTABLISHMENT OF CONTROL 4-1
4.3 WORKSITE PREPARATION 4-2
4.4 EXCAVATING AND TRENCHING 4-2
4.5 WELDING 4-2
4.6 CATHODIC PROTECTION 4-2
4.7 BACKFILL AND COMPACTION 4-3
4.8 HYDROSTATIC-PRESSURE TESTING 4-3
4.9 PAVEMENT RESTORATION 4-4
4.10 SHOULDER REPAIR AND REVEGATION 4-4
4.11 BRIDGE CROSSING 4-4
4.12 FINAL INSPECTION AND ALIGNMENT MARKING 4-4
5.0 EROSION AND SEDIMENT CONTROL (BMPS EP 7, EG 303) 5-1
5.1 TEMPORARY EROSION CONTROL BARRIERS 5-1
5.2 STANDARD CONSTRUCTION METHODS 5-3
5.2.1 Pavement Cutting 5-3
5.2.2 Ditching 5-3
5.2.3 Underground Utilities 5-3
5.2.4 Installation / Backfilling 5-3
5.2.5 Trench Dewatering (BMP- EG 706) 5-3
5.2.6 Padding 5-4
5.2.7 Backfilling 5-4
5.2.8 Restoration and Revegetation 5-5
5.2.9 Monitoring/ Reporting 5-5

5.3 SAFETY 5-5
5.4 ACCESS ROADS 5-5
5.5 PIPE YARDS 5-6
5.6 INADVERTENT DISTURBANCE OFF RIGHT-OF-WAY 5-6
6.0 SPECIALIZED CONSTRUCTION METHODS 6-1
6.1 RESIDENTIAL AREA CONSTRUCTION 6-1
6.2 BASS RIVER CROSSING AT HIGHBANK ROAD BRIDGE 6-1
6.3 CULVERTED STREAM CROSSING 6-2
6.4 EQUIPMENT CROSSOVERS 6-2
6.5 WELLHEAD PROTECTION AREA CROSSING 6-3
6.6 WETLAND CROSSINGS 6-4
6.6.1 General Conditions for Wetland Crossings 6-4
7.0 POTENTIAL STORM WATER POLLUTANT SOURCES AND CONTROL MEASURES 7-1
7.1 CONSTRUCTION DUST AND SILT CONTROL 7-1
7.2 OFFSITE SEDIMENT TRACKING 7-1
7.3 PETROLEUM PRODUCTS 7-1
7.4 SANITARY WASTES 7-1
7.5 HAZARDOUS WASTES 7-1
7.6 PAINTS 7-2
7.7 CONCRETE TRUCKS 7-2
7.8 SOLID WASTE 7-2
7.9 ALLOWABLE NON-STORMWATER DISCHARGES 7-2
7.10 BEST MANAGEMENT PRACTICES 7-2
8.0 SPILL PREVENTION CONTROL AND COUNTERMEASURES PLAN 8-1
8.1 PREVENTATIVE MEASURES 8-1
8.1.1 Training 8-1
8.1.2 Equipment Inspection and Maintenance 8-1
8.1.3 Refueling Operations 8-1
8.1.4 Storage 8-2
8.1.5 Personnel Support 8-3
8.2 IMPACT MINIMIZATION MEASURES 8-3
8.3 SUGGESTED EQUIPMENT LIST 8-4
8.3.1 Terrestrial Construction 8-4
8.3.2 Waterbody and Wetland Crossings 8-5
9.0 AIR QUALITY AND NOISE 9-1
9.1 AMBIENT AIR QUALITY PROTECTION 9-1
9.2 CONSTRUCTION NOISE MANAGEMENT AND MITIGATION 9-2

List of Appendices

APPENDIX A CONSTRUCTION DRAWINGS (to be completed)

APPENDIX B EROSION CONTROL DRAWINGS

APPENDIX C STORMWATER POLLUTION PREVENTION PLAN (to be completed)

APPENDIX D NATURAL RESOURCE PROTECTION

EP 3	Natural Resource Protection
EG-302MA	Protected Waters
EG-303NE	ROW Access, Maintenance, and Construction BMPs
EG-706	Excavation Dewatering

APPENDIX E SPILL RESPONSE PROCEDURE

EG-501MA	Immediate Spill Response Actions Guidance
EG-502MA	Spill Response Procedures and Notifications

APPENDIX F HYDROSTATIC TEST PROCEDURE

APPENDIX G COPIES OF PERMITS/APPROVALS (to be completed)

APPENDIX H AMENDMENTS TO THE ECP (if applicable)

List of Acronyms

Acronym	*Definition*
BMP	Best Management Practice
CI	Chief Inspector
COE	United States Army Corps of Engineers
DPU	Massachusetts Department of Public Utilities
DPW	Department of Public Works
ECP	Environmental Construction Plan
EI	Environmental Inspector
EPA	United States Environmental Protection Agency
NG	National Grid
MAOP	Maximum Allowable Pressure
MHC	Massachusetts Historical Commission
MLV	Mainline Valve
NESHAP	National Emission Standards for Hazardous Pollutants
NRCS	Natural Resource Conservation Service
OSHA	Occupational Safety and Health Administration
SHPO	State Historical Preservation Office
SLRP	Sagamore Line Reinforcement Project
SPCC Plan	Spill Prevention Countermeasure and Control Plan
SWPPP	Storm Water Pollution Prevention Plan
ROW	Right of Way
ULSD	Ultra-low sulfur diesel
USDOT	United States Department of Transportation

Section 1.0

Introduction

1.0 INTRODUCTION

The purpose of this Environmental Construction Plan ("ECP") is to avoid, minimize and/or mitigate the potential impacts to the surrounding environment before, during, and after construction of the Project by outlining mitigation, monitoring and maintenance procedures. For example, this ECP will outline general Best Management Practices ("BMPs") that NG and its Construction Contractors ("Contractors") will implement before, during, and after construction to minimize erosion of disturbed soils and transportation of sediment outside of the construction right-of-way ("ROW") and into environmentally sensitive areas (e.g., wetlands, streams). The BMPs are designed to provide minimum standards for the protection of environmentally sensitive areas that will be encountered during construction of the Project.

This ECP will provide specifications for the installation, implementation, and maintenance of the BMPs while allowing for flexibility in the selection of specific BMPs based on-site-specific conditions. This document will be included as part of the construction contract and will provide Contractors and Environmental Inspectors ("EI") a reference to specific environmental conditions and associated BMP plans and procedures.

This ECP describes the basic construction techniques that National Grid ("NG") and its contractors will implement to construct the Mid Cape Main Replacement Project, 18.1 miles of a 200-psig replacement main in the towns of Yarmouth, Dennis, Harwich, and Brewster on Cape Cod Massachusetts (the "Project). There will also be construction of appurtenant facilities, including mainline valves ("MLVs"), cathodic protection, and pig launcher/receivers within the Project area.

The Mid-Cape Main Replacement Project is a multi-stage project designed to ensure the continued reliability of the natural gas distribution system and to restore the operating pressure of the distribution main at 200 psig. Upon completion, the Project will provide integrity of construction, supported with appropriate testing and construction records, to ensure safe and reliable operations into the future. These construction techniques have been designed to minimize environmental impacts during and following construction. NG has based the specifications in the ECP on procedures successfully used in constructing, operating and maintaining pipeline systems throughout the United States, and on guidelines and recommendations from the Massachusetts Department of Public Utilities ("DPU"), the Cape Cod Commission, the U. S. Army Corps of Engineers ("COE"), and the U.S. Department of Agriculture and the Natural Resources Conservation Service ("NRCS").

The ECP incorporates as one document NG's measures for erosion and sediment control, wetland and waterbody crossings and spill prevention and control. By incorporating the above plans into one document and adding site specific information, NG is able to tailor the ECP to the requirements of the Storm Water Pollution Prevention Plan ("SWPPP") required under the U. S. Environmental Protection Agency ("EPA") General Permit for Storm Water during Construction.

The Project will be constructed over one or more construction seasons, by one or more contractors. After a portion of the Project is designed and prepared for bidding, the ECP will be reviewed and modified as necessary to suit the specific alignment of the Project. The ECP will then be included as part of the pre-bid package and construction contract/specifications. It shall be the responsibility of the selected contractor(s) (Contractor) to adhere to the terms of the ECP.

The ECP provides for the retention by NG of an EI, whose duties are described in Section 3.0. Generally, the EI shall represent the interests of NG in ensuring compliance by the Contractor with applicable laws and regulations and adhering to Best Management Practices. This shall not relieve the Contractor of its independent obligation to comply with all such applicable laws and regulations and follow Best Management Practices.

Section 2.0

Project Description

2.0 PROJECT DESCRIPTION

The Project consists of three segments, each of which is described below:

- Yarmouth-Dennis Segment (4.9 miles): This segment involves the replacement of approximately 4.9 miles of 10-inch CS (200 psig) primarily with 12-inch main. The only exception is approximately 1,000 feet from the Company's property in South Yarmouth at 127 Whites Path to the existing 12-inch Sagamore Line Reinforcement Project ("SLRP") Middle Segment main and existing 200-psig pipeline in Whites Path, which will be replaced with 20-inch main; from this point the diameter of the replacement main will be 12 inches the rest of the way as it travels through portions of the Towns of Yarmouth and Dennis to the intersection of Main Street and Depot Street in North Harwich. The existing 4.7 miles of 12-inch CS main parallel to the existing 200-psig pipeline along this length was installed between 2007 and 2010 as the SLRP's Middle Segment. This existing pipe will not be affected by this Project and will continue to operate at 200 psig.

- Harwich Segment (~8.0-8.1 miles):

  - Replace approximately 4.8 miles of 8-inch CS main with 12-inch CS main from the end of the Yarmouth-Dennis Segment in North Harwich to the intersection of Orleans Road and Depot Road, where the route splits and extends into East Harwich and South Harwich;

  - Replace approximately 1.6 miles of 6-inch CS main with 12-inch CS main from the intersection of Orleans Road and Queen Anne Road in East Harwich north along Orleans Road to the end of the 200-psig main at Route 39 and Church Street; and

  - Replace approximately 1.6 miles of 6-inch and 8-inch CS main with 12-inch CS main from the intersection of Queen Anne Road and Depot Road in East Harwich south to the end of the 200-psig main at the intersection of Main Street (Route 28) and Depot Road in South Harwich.

- Brewster Segment (5.2 miles): This segment involves the replacement of approximately 5.2 miles of 10-inch CS main with 12-inch CS main from the end of the Yarmouth-Dennis Segment at the intersection of Main Street and Depot Street in North Harwich to the intersection of Main Street and Stony Brook Road in Brewster.

2.1 Project Purpose

Construction of the proposed 18.1-mile replacement main will allow the Company to restore system pressures to 200 psig, thus strengthening downstream pressure and providing for adequate supply to lift restrictions on new services, expanded services, and conversions on the Mid- and Lower-Cape. It will also once again reduce the Company's reliance on portable LNG. Upon

completion, the Project will provide integrity of construction, supported with appropriate testing and construction records, to ensure safe and reliable operations in the future.

2.2 Construction Schedule

The Project is currently planned as three construction phases, with some possibly running concurrently. An additional phase is also possible, as the Company is considering construction of the easternmost 1.6 miles in Harwich prior to the rest of the Project, potentially in the Fall of 2016. Assuming that the Project's environmental reviews, licensing, and permitting can be completed by early 2017, the entire Project is currently slated for completion in 2019. Completion of the Project can occur even earlier if permitting is completed earlier than 2017. As sections of the new replacement main are installed and completed, the Company will analyze whether those sections can be placed into service.

The construction schedule will continue to be refined as NG has detailed discussions with the municipalities.

Section 3.0

Supervision and Inspection

3.0 SUPERVISION AND INSPECTION

3.1 Environmental Organization and Communication Procedures

NG will engage the services of a qualified EI to manage the environmental inspection program, to ensure that the ECP is carried out by the Contractor as described in this document, and to ensure that construction activities will be in compliance with requirements of applicable federal, state and local environmental permits and approvals. The EI will be independent of the Contractor and will report directly to NG. The EI will have immediate access to NG's Chief Inspector ("CI") and will have "stop work" authority relative to environmental non-compliance. The specific responsibilities of the EI are described below in Section 3.2.

3.2 Environmental Inspector Responsibilities

The EI will review all project documents (e.g., right-of-way, descriptions, permits, alignment sheets and relevant plans and NG Environmental BMP's, prior to construction. The EI's responsibilities are described below.

3.2.1 Erosion and Sedimentation Control; Right-of-Way Restoration

The EI will be responsible for the oversight of the Contractor's implementation and proper maintenance of erosion and sedimentation control. Specific responsibilities of the Contractor to be monitored and inspected by the EI include:

- identifying areas that require stabilization;
- ensuring erosion and sedimentation control devices are installed and maintained properly;
- ensuring erosion and sedimentation control devices are inspected at least weekly, and also within 24 hours of any rainfall of 0.5 inches or greater;
- ensuring the repair of ineffective erosion control measures within 24 hours of identification;
- locating dewatering structures to ensure that water is not directed into known cultural sites or locations of sensitive species;
- ensuring that trench dewatering activities do not result in the deposition of sand, silt, and/or sediment, near the point of discharge, into a wetland or waterbody;
- ensuring that the soil profile is restored as required;
- monitoring restoration and revegetation of upland areas, waterbodies and wetlands; and
- ensuring that construction activities occur only within authorized work areas.

3.2.2 Training

The EI shall oversee the training provided by the Contractor as new personnel begin working on construction. The EI shall educate other inspectors on project specific environmental concerns.

3.2.3 Record and Documentation Control

The EI is responsible for inspecting construction related activities to verify and document that the Contractor is complying with the ECP, applicable federal, state, regional and local requirements The Contractor's responsibilities will include:

- Photo-documenting sensitive areas and workspaces before, during, and after construction;
- Documenting activities with daily logs, weekly reports and other required documentation;
- Identifying potential problems and initiating proactive actions prior to occurrence;
- Updating project alignment drawings to illustrate the locations of additional temporary and permanent erosion controls; and
- Providing notification of construction activities to agencies as required in permits.

The EI shall maintain and update the ECP as necessary as construction proceeds.

3.2.4 SPCC Oversight

The EI shall oversee the implementation of the Spill Prevention Control and Countermeasure Plan ("SPCC Plan") by the Contractor, as it is described in Section 8.0 below. The Contractor's responsibilities will include:

- Monitoring waste collection and disposal;
- Preparing a pre-job inventory of lubricants, fuels, and other materials that could be discharged;
- Consulting with NG to determine reportable spill quantities for materials identified in the inventory;
- Classifying each material on the pre-job inventory as hazardous or non-hazardous waste;
- Identifying the approved waste transporters and disposal sites for both hazardous and non-hazardous wastes;
- Approving the Contractor's list of equipment and spill procedures and impact minimization measures submitted pursuant to Section 7.1.3;
- Defining the duties and coordinate the responses of all persons involved in cleaning up a spill;
- Maintaining, with support from NG, an up-to-date list of names, addresses, and phone numbers of all persons to be contacted in case of a spill; and
- Conducting training for spill prevention and impact minimization.

3.3 Accidental Discovery Plan – Archaeological Sites

3.3.1 Introduction

NG is committed to the protection and preservation of cultural resources, in accordance with federal and state legislation, and is continuing that commitment as part of the Project. The Project is below grade and along previously disturbed roadways. Because the Project is proposed within existing roadway layout, it is not expected to encounter any previously-undisturbed areas, and as such no impacts to archaeological resources are expected. Nonetheless, NG recognizes that, however unlikely, it is possible that cultural resource deposits could be discovered during project construction or maintenance activities, particularly during excavation. NG also recognizes the requirement for compliance with federal and state regulations and guidelines regarding the treatment of human remains, if any are discovered.

As such, the procedures guiding the unanticipated discovery of cultural resources and human remains detailed herein were developed on behalf of NG and in consultation with the Massachusetts Historical Commission ("MHC"), pursuant to Massachusetts General Laws Chapter 7, §38A; Chapter 9, §26A and 27C; Chapter 38, §6; Chapter 114, §17; and Chapter 272, §71 and 73. They represent the approach that NG will use to address emergency discoveries of archaeological cultural resources during construction activities within the project area of potential effect.

3.3.2 Procedures

Below are steps that will be followed in the event that new cultural resource sites or human remains are discovered during the construction process.

Artifact Discoveries

1. Possible artifacts may be discovered by NG or Contractor construction personnel. In the event that suspected artifacts are uncovered during a construction activity, that activity shall immediately be halted until it can be determined whether that materials are cultural and, if so, whether they represent a potentially significant site.

   If artifacts are identified by Contractor construction personnel, activities that could affect the integrity of the cultural materials will be suspended immediately and the contractor's construction foreman will be notified immediately. The foreman, in turn, will notify NG's Chief Inspector. Notification will include the specific construction area (e.g., trench wall, spoil pile, foundation excavation) in which the potential site is located.

2. Upon notification or discovery of a possible site, NG will contact its cultural resource management consultants to review the material. On-site NG personnel will discuss with the archaeologist the location and type of artifacts. If the archaeologist is not in the immediate site vicinity and further work in the excavation area is not imminent, photographs or drawings of the artifacts may be faxed to the archaeologist for review.

   Based on the information provided, the archaeologist will determine if a visit to the area is required and, if so, is expected to have crews on-site within 24 hours after notification.

If on-site archaeological investigations are required, NG will inform the Contractor. No construction work at the site that could affect the artifacts will be performed until archaeologists review the site and the results communicated to the MHC. The site will be flagged as being off-limits for work, but will not be identified as an archaeological site per se in order to protect the resources.

3. The archaeologists will conduct a review of the site and will test the site as necessary. Since the area will have already been partially disturbed by construction activities, the objective of any cultural resource investigations will be to recover data quickly so that construction at the site can continue in a timely manner.

4. The archaeologists will determine, based on the artifacts found and on the cultural sensitivity of the area in general, whether the site is potentially significant and whether the State Archaeologist requires immediate notification by telephone. If not, data regarding the site will be faxed or sent by express mail to the MHC in order to ensure a quick site clearance.

Human Remains Discoveries

1. If human remains are identified by any personnel on the construction site, all construction work in the immediate vicinity of the site that could affect the integrity of the remains will cease immediately.

2. Personnel who identify the remains will immediately inform the NG Chief Inspector of the exact location of the remains, as well as of the time of discovery. The Chief Inspector will in turn will be responsible for immediately contacting NG's cultural resources consultant.

3. The archaeologist and NG will be responsible for immediately notifying the MHC, the Chief Medical Examiner, and the State Police.

4. If the Chief Medical Examiner determines that the human remains are less than 100 years old, a criminal investigation may be warranted. If the remains are determined to be older than 100 years, the Chief Medical Examiner will notify the State Archaeologist.

5. The State Archaeologist will conduct an investigation to determine the age, cultural affiliation, and identity of the burial. If it is determined that the remains are those of a Native American, the State Archaeologist will notify the Commission on Indian Affairs. The State Archaeologist, the landowner, and NG will consult to determine "whether any prudent and feasible alternatives exist to avoid, minimize, or mitigate harm to the Indian burial site". The results of this consultation will be made in writing.

   If it is not possible to protect the remains, they may be excavated only under a memorandum of agreement with all interested parties including FERC, NG, State Archaeologist/Deputy SHPO, the Commission on Indian Affairs, and landowner(s), as appropriate. This memorandum will outline an adequate data recovery plan that specifies a qualified research team and an appropriate research design (including a proposal for disposition of the remains). Excavation, removal, and analyses of the remains will be conducted under the supervision of the Commission on Indian Affairs. After analyses, the remains will be returned to the appropriate Native American group for disposition.

In all cases, due care will be taken in the excavation and subsequent transport and storage of the remains to ensure that the sacred meaning of the remains for Native Americans are respected and protected, as required. Any excavation of said human remains must be conducted under a Special Permit (950 CMR 70.20).

3.3.3 List of Contacts

Massachusetts Historical Commission
220 Morrissey Boulevard
Boston, Massachusetts 02125
Contact: Ms. Brona Simon, State Archaeologist/Deputy State Historic Preservation Officer
(617) 727-8470; FAX: (617) 727-5128

Commission on Indian Affairs
Massachusetts Commission on Indian Affairs
1 Congress Street, 10th floor
Boston, MA 02114
(617) 573-1291

Wampanoag Tribe of Mashpee
483 Great Neck Road - South
Mashpee, Massachusetts 02649
Contact: David Weeden, Deputy Tribal Historic Preservation Officer
(508) 477-0208

State Office of the Chief Medical Examiner
720 Albany Street
Boston, Massachusetts 02118
Contact: Dr. Ann Marie Mires, Forensic Anthropologist
(617) 267-6767

State Police Barracks
1172 State Road
South Yarmouth, Massachusetts 02664
(508) 398-2323

Section 4.0

Construction Sequence Summary

4.0 CONSTRUCTION SEQUENCE SUMMARY

The replacement main will be installed within existing roadway layouts either beneath pavement or within 10 feet of pavement (but mostly beneath pavement). The majority of the replacement main will be installed within three feet of the existing main, with only a few locations where replacement pipe will need to be installed across the street but parallel to the existing line. The Company's design engineers have been working with Town Department of Public Works ("DPW") Directors, Town Engineers, and other officials throughout the design process to ensure that the proposed replacement main alignment does not impact existing underground infrastructure or any proposed projects. Temporary work space approximately 20 to 25 feet in width will be required as construction proceeds along the route. Depending on the location, either one lane of the existing roadway will be utilized for workspace or a portion of the workspace will extend onto the shoulder of the road. Although the Company will seek to minimize road closures, there may be locations where temporary road closures are necessary where the main will cross the road or installation is needed closer to the middle of the road to avoid existing underground utilities. No tree removal will be necessary.

4.1 Construction Methodology

The Project will be constructed using the "stove pipe" method of construction, which is commonly employed in space-constrained areas. This technique normally involves installing the replacement main two approximately 40-foot double random lengths at a time. Work required to join the two 40-foot sections (welding, radiography, and coating) will predominantly be performed at-grade, after which a side-boom tractor or backhoe will lower the pipe into a limited length of open trench. The same general installation steps will also occur when advancing open trench construction, typically required when connecting two pieces of pre-installed main or at tie-ins to existing infrastructure. As the work-day proceeds, newly installed main will be backfilled and compacted, and pavement will be restored.

The footprint for trench excavation will typically be three feet wide by five feet deep. In locations where in-line welding will be performed or where the proposed replacement main will pass under existing utilities, the excavated area will be larger, typically 10 feet long by 6 feet wide and up to 8 feet deep to accommodate a shoring box. These shoring boxes will be required approximately every 40 to 80 feet along the proposed replacement main.

During installation, all replacement main welds will be nondestructively tested. In non-destructive testing, a radiographic or X-Ray test is performed on every weld in the field. An X-Ray is taken of the weld around the pipe's circumference and the X-Ray is reviewed by a trained technician to confirm the acceptability of the weld in accordance with API Standard 1104. If any unacceptable flaws are detected, that portion of the weld will be ground out and repaired. This test is termed "nondestructive" testing because it does not degrade the integrity of the weld.

Replacement main construction is expected to proceed at a rate of approximately 120 feet per day, with not more than 200 feet of trench open at any particular location. The construction sequence is described in further detail below.

4.2 Establishment of Control

The Contractor will mobilize. Existing utilities will be flagged. Erosion and sedimentation control

measures will be set up per the Storm Water Pollution Prevention Plan ("SWPPP"). As agreed upon with local authorities, measures called for by Traffic Management Plans (e.g., barrels, warning signs, officer control) will be put in place.

4.3 Worksite Preparation

The trench location will be staked on the ground or marked on the pavement. As necessary, pavement will be saw-cut and removed for off-site recycling or proper disposal. If the trench passes near utility poles, the poles and lines will be temporarily supported as needed.

4.4 Excavating and Trenching

The trench will be excavated using a backhoe or excavator, and a trench box and/or shoring will be installed where needed. For the proposed replacement main, the trench will be approximately three feet wide and five feet deep. To minimize hauling by truck and expedite backfilling, excavate will be stockpiled next to the trench on the pavement or shoulder, or will be temporarily stockpiled in a dump truck. At locations where stockpiling is unacceptable due to pavement width or local environmental conditions, excavate will be loaded onto trucks for transport to a prepared storage location, which will be coordinated with local authorities. Suitable bedding materials (typically, six inches of sand) will be placed in the trench. Pipe sections will be approximately 40 feet (double random) in length, and two sections of pipe will be positioned next to the trench for welding.

Once excavated, the trench will be sheeted and shored as required by soil conditions, Occupational Safety and Health Administration ("OSHA") safety rules, and local and state regulations. Shoring is designed to permit passage of traffic adjacent to the trench and will allow for the trench to be covered with a steel plate to allow traffic over the trench during non-working hours.

4.5 Welding

The Company's welding procedures will be utilized on this Project. All welding will be performed in accordance with all applicable state and federal codes (USDOT Title 49, Part 192) as well as industry standards. In addition, one hundred percent (100%) of welds will be radiographically (i.e., X-Ray) inspected. Typically, pipe lengths will be set out adjacent to the trench and two sections will be welded together before the welded sections are placed into the trench. Because the pipeline is being constructed in a section-by-section manner, sections of pipeline are generally trucked to the construction area or to a local staging area as they are needed. This eliminates the need for large pipe yards and/or completing assembly of long runs of pipe in the area adjacent to an open trench. Where possible, NG may weld two pipe sections together before placing the pipe in the trench. This approach reduces the number of in-trench welds which require a much larger open excavation. Section-by-section construction also allows for the use of smaller equipment to place the pipe (i.e., a single standard excavator or backhoe and a side boom as opposed to several large side boom crawler tractors).

4.6 Cathodic Protection

The coated steel replacement main will be protected from corrosion in three ways: (1) the replacement main will be shipped to the Project site with a protective exterior coating (i.e., abrasion-resistant epoxy), which is added after the manufacturing process; (2) a similar coating (tape

or shrink sleeves) will be applied to all field welds during construction; and (3) cathodic protective devices (e.g., Magnesium Anode bed system) will be installed during construction.

4.7 Backfill and Compaction

Four to six inches of sand padding will be placed around the circumference of the installed pipe, and then suitable backfill will be placed above the pipe and compacted. A broad plastic marking/warning tape will be placed above the pipe to help ensure that future excavation does not inadvertently damage the pipe. Generally, three feet of cover is placed above the pipe; where the pipe must be shallower (i.e., with less than two feet of cover) due to utility conflicts or ledge, concrete shielding or steel plates will be placed above the pipe for protection. Backfill beneath paved areas will generally be placed in lifts six to twelve inches thick, with proper compaction performed after placement of each lift.

Backfill and compaction operations will be carried out in strict compliance with procedures established by the DPU (*Standards to Be Employed by Public Utility Operators When Restoring any of the Streets, Lanes and Highways in Municipalities* ("Street Restoration Standards", D.T.E. 98-22, 1999). These procedures contain specific provisions for the Suitability of Backfill Material, Evaluation of Excavated Material, Proper Moisture Content, Compaction and Verification, and Training and Certification.

4.8 Hydrostatic-Pressure Testing

Upon completion of the pipeline installation, the pipeline will be hydrostatically tested. Hydrostatic testing verifies the structural integrity of the constructed pipeline segments. Integrity is tested by capping pipeline segments with test manifolds and filling the capped segments with water. The water is then pressurized to at or above the Maximum Allowable Operating Pressure ("MAOP") of the pipeline and held for a period of time depending on the length of pipeline being tested. Any significant loss of pressure indicates that a leak may have occurred and that the pipeline needs to be repaired and re-tested prior to being put into service. The source of the water used for testing is typically taken from a municipal source. Hydrostatic testing of the pipeline will be performed in multiple sections along the Project. The final testing locations will be determined by a NG representative.

In total, approximately 572,960 gallons of water will be required to test the replacement main (although testing will likely be performed in segments), and municipal water will be the likely source. Once the pipe is demonstrated to be leak-tight, the pressure will be relieved and the Company will pump the test water into storage tanks; no chemical additives will be added to the water. The Company is prepared to haul the test water to an off-site wastewater treatment facility for disposal, if necessary. However, the Company intends to coordinate with each municipality along the Project route regarding the possibility of discharging the test water to approved locations adjacent to the Project area, in a manner consistent with applicable statutory and regulatory requirements and the Company's environmental policies. Such discharge would be performed in accordance with BMPs prepared specifically for this Project in consultation with the municipalities.

If such arrangements can be made, discharging the test water would be NG's preferred method for handling this water. The test water would be containerized as the testing of each section of the replacement main is completed, and the water would be filtered through an appropriate combination of filter media and discharged to an upland area, provided that pre-characterization

results reveal it is suitable for such discharge. Discharge would be carried out in a location and at a rate that the water could be absorbed without creating impacts to the surrounding area. Hydrostatic testing procedures will be performed in a manner consistent with the EPA General Permit.

4.9 Pavement Restoration

Where the trench location requires cutting of pavement, pavement restoration will be carried out in compliance with Section 9.0 of the DPU Street Restoration Standards. Generally, all pavement excavations will be repaired with same-day permanent patches unless specifically agreed to by the town. Typically, temporary patches are only permitted for work between December 1 and March 31, when bituminous concrete is not available, or if the excavation must be reopened within five working days (e.g., to continue work after a weekend). In general, the length of new excavation completed each day will equal the length of replacement main installed, backfilled, and compacted. The Company expects to install approximately 200 feet of pipe per day per crew.

If, at the end of the day, construction is not complete along an active section, any street openings will be covered with steel plates and marked with drums and yellow flashers until pavement patching is accomplished. Openings in the shoulder will be protected and barricaded to ensure traffic and pedestrian safety.

4.10 Shoulder Repair and Revegetation

In most cases, the replacement main will be installed beneath existing pavement, and the shoulder will be unaffected. However, in places where the replacement main will be installed within 10 feet of pavement, the shoulder will be graded to its pre-existing contours, with slight mounding to allow for settlement. Any disturbed vegetated areas will be loamed and seeded to match pre-existing vegetation. Any lawn-edge that has been affected by replacement main installation, including equipment passage, will be hand-dressed, seeded, and mulched.

4.11 Bridge Crossing

At the Highbank Road crossing of the Bass River, an existing utility bay on the bridge will be prepared to receive the replacement main, and it will be installed similar to placement in a trench (e.g., welding, coating, X-Ray). The replacement main will be attached and supported to the bridge via pipe hangers or pipe rollers. The replacement main will be designed to accommodate thermal expansion and contraction of the main itself.

4.12 Final Inspection and Alignment Marking

The alignment will be checked by a NG supervisor to ensure the area is properly restored, swept, and tidy. Alignment markers will not be required for the replacement main.

Section 5.0

Erosion and Sediment Control (BMPs EP 7, EG 303)

5.0 EROSION AND SEDIMENT CONTROL (BMPS EP 7, EG 303)

NG's objective is to avoid, minimize, and mitigate potential impacts to the surrounding environment before, during, and after construction of the Project. The BMPs are designed to provide minimum standards for the protection of environmentally sensitive areas while accounting for the varying field that may be encountered during construction. NG will meet these objectives by implementing erosion and sediment control measures contained in this section. In general, these erosion and sediment control measures will serve as minimum standards during construction:

- Minimizing the quantity and duration of soil exposure;
- Protecting areas of critical concern during construction by redirecting and reducing the velocity of runoff;
- Installing and maintaining erosion and sediment control measures during construction;
- Establishing vegetation where required as soon as possible following final grading; and
- Inspecting the construction route and maintaining erosion and sediment controls as necessary until final stabilization is achieved and final inspections completed.

It will be the responsibility of the Contractor to implement and maintain erosion and sediment control measures during construction. The EI or designee (such as a construction supervisor) will provide oversight of the contractor's activities. The sections below include erosion and sediment control techniques that apply to all areas of construction.

5.1 Temporary Erosion Control Barriers

Hay/straw bales and silt fences are interchangeable, except where noted below. Temporary erosion control barriers will be installed prior to initial disturbance of soil and maintained as described below:

- At the outlet of a slope break when existing vegetation is not adequate to control erosion;
- Down slope of any stockpiled soil in the vicinity of waterbodies and vegetated wetlands;
- At sideslope and downslope boundaries of the construction area where run-off is not otherwise directed by a slope break;
- Maintained throughout construction and remain in place until permanent revegetation has been judged successful, upon which they will be removed;
- At boundaries between wetlands and adjacent disturbed upland areas;
- As necessary to prevent siltation of ponds, wetlands, or other waterbodies adjacent to/downslope of the Project;
- At the edge of the construction area as needed to contain soil and sediment; and

- Catch basins along the work area will be protected using "silt sacks" and perimeter hay bales. The silt sacks and hay bales will be installed before pavement removal and trench excavation begins and will remain in place until the area is repaired and the shoulder repaved and revegetated.

Temporary erosion control barriers will be inspected on a daily basis in areas of active construction or equipment operation, on a weekly basis in areas with no construction or equipment operation, and within 24 hours of a storm event that is 0.5 inches or greater in precipitation.

Silt Fence Installation and Maintenance

Any silt fence used as a construction-period control will be installed as directed by manufacturer and applicable permit conditions. Accumulated sediment will be removed and the fence inspected to ensure it remains embedded in the soil as directed. Sufficient silt fence will be stockpiled onsite for emergency use and maintenance.

Hay/Straw Bale Installation and Maintenance

Hay/straw bale installation and maintenance will be performed as follows:

- Hay/straw bales will be anchored in place with at least two properly sized wooden stakes;
- Bindings on bales will be horizontal;
- Bales shall be replaced if damaged or are allowing water to flow underneath;
- Damaged bales will be replaced with new bales as deemed necessary by the Environmental Inspector;
- A sufficient supply of bales will be maintained on site for emergency use;
- Bales bound with wire or plastic will not be used; and
- Properly placed and staked straw wattles or fiber rolls may be used in lieu of hay bales in certain circumstances. Such substitutions will be approved by the EI in advance.

Water Bars/Terraces (Slope Breakers Where Necessary)

Water bars/terraces shall be installed diagonally across the ROW when slopes are approximately 2 to 8%, except in cultivated areas and lawns.

- A temporary channel will be excavated and a compacted berm created adjacent to the channel or ridge of compacted soil.
- The bar/terrace shall be created in such a way as not to prohibit safe passage.
- Water bars/terraces shall be maintained and repaired at the end of each day.

- Water bars/terraces shall divert water to a well-vegetated area. If a vegetated area is unavailable, erosion control barriers shall be installed at the limit of the construction ROW at the outlet of the water bar.

Silt fence, hay bales or sandbags may be used in place of water bars/terraces per the EI.

5.2 Standard Construction Methods

Construction of a natural gas distribution pipeline consists of several distinct phases: ditching, installation, backfilling, performance testing and restoration. Since the Project will be installed within existing roadway layout, either beneath pavement or within 10 feet of pavement, no significant clearing or grading is proposed. The construction methods described will be used in conjunction with the methods described in Section 5.0 and Section 6.0.

5.2.1 Pavement Cutting

Pavement will be cut with a pavement saw, which cuts a trench line in the pavement and across driveways and intersecting roadways. Pavement will be temporarily stockpiled within the work zone and will be trucked away and disposed of in accordance with applicable regulations.

5.2.2 Ditching

The centerline of the proposed pipeline will be staged when the construction zone has been prepared. It is anticipated that a backhoe or excavator will be utilized.

5.2.3 Underground Utilities

Existing underground utilities shall be located and carefully exposed, by hand digging if necessary. Appropriate authorities such as Dig-Safe and some municipal water departments will be notified 72 hours prior to any excavation.

5.2.4 Installation / Backfilling

Section 4.1 describes the installation and backfilling for the replacement main.

5.2.5 Trench Dewatering (BMP- EG 706)

Trench dewatering is the process of removing excess runoff and groundwater that has accumulated and is occupying the trench line to allow for the installation of the pipe and dry backfilling of the trench. Trench dewatering management will be accomplished using a combination of BMPs that will be tailored to the site-specific conditions for each dewatering operation. Water found in all excavations must be assessed for obvious signs of contamination (e.g., discoloration, odor, signs of oil) prior to discharge. Water exhibiting signs of contamination cannot be pumped to the ground, catch basin, sewer system, or surface water and will typically need to be pumped by a waste management contractor for proper off-site disposal.

If the assessment shows no evidence of contamination, BMPs must be followed to avoid pumping sediment-laden water from the excavation. One or more of the procedures below must be utilized when pumping water from excavations. The BMP(s) selected must be monitored for effectiveness

in avoiding the discharge of sediment and, if they are ineffective, additional or different BMPs must be used:

- NG's first choice is to discharge water into approved upland areas that are well vegetated or other stable upland erosion resistant areas. The EI will assist in choosing dewatering location, and has the authority to stop work and relocate the structure if the structure is not placed correctly or is causing sedimentation;

- Sump pits may be utilized in conjunction with an appropriate outlet device (e.g., filter bag) to dewater the trench line. The pits may be placed within the trench line or adjacent to it, depending on the workspace configuration and the amount of water that is needed to be removed from the work area. An effective sump would be gravel-lined and result in a discharge without significant amounts of sediment;

- Filter fabric must be used over storm drains and sewer inlets;

- Protect all surface waters and wetlands from sediment deposit using straw bales and a silt fence between the excavation and the body of water or wetland;

- Use a filter bag/sock or pump box at the discharge end of the dewatering pump hose to capture all sediment; and

- For large projects, construct a dewatering pit using straw bales and filter fabric to filter the water discharge.

5.2.6 Padding

- Is a layer of rock-free (less than 1.5 inches) subsoil or sand placed under the pipe.

- Used where specified so that rock, gravel or other materials do not damage the pipe coating

- Topsoil will not be used as padding.

- Rocks up to 6 inches in diameter may not be placed within 12 inches adjacent to the pipeline.

- If insufficient padding materials are not available on-site due to subsoil conditions, additional padding will be obtained only from approved sources.

5.2.7 Backfilling

A final inspection will be made prior to backfilling to ensure that all debris has been removed from the ditch and the pipe coating is undamaged.

- Settling will be minimized with the use of compaction equipment, or a crown of soil will be placed over the pipeline to compensate for future soil settling. If crowning is used, openings shall be installed at regular intervals in the crown to allow for lateral surface drainage.

- Excess or unsuitable material shall be disposed of in accordance with applicable regulations.

- All backfilling and compaction beneath pavement will be performed in compliance with the DPU Street Restoration Standards.

5.2.8 Restoration and Revegetation

Restoration of the construction zone incorporates permanent erosion and sediment control measures. However, in the event that final restoration cannot occur in a timely manner due to weather or soil conditions, temporary erosion and sediment control measures will be maintained until the weather is suitable for final cleanup and revegetation. In no case shall final restoration be delayed beyond the end of the next growing season.

Pavement restoration and shoulder repair/revegetation are described in Sections 4.9 and 4.10.

5.2.9 Monitoring/ Reporting

Monitoring and reporting requirements will be discussed with Town Officials. Monitoring reports will be filed with Town Officials if required.

5.3 Safety

Temporary safety fences shall be erected at ROW crossings (e.g., residential areas, sensitive environmental areas, road crossings, etc.) where necessary.

- The length of time that the ditch is left open shall be minimized through coordination by the CI and the Contractor;

- Soil tracked onto roads by construction equipment shall be minimized and will be cleaned in a manner consistent with all applicable permits. If stone access pads are used in residential or active agricultural areas, synthetic fabric will be used to facilitate removal;

- NG may employ flagmen and/or police details for traffic control, temporary traffic detours and/or off-site parking facilities and busing for work crews. Proper signage and other safety provisions will be maintained in accordance with the Project's Traffic Management Plans;

- An electric utility may have inspectors onsite at all times while construction activities occur near electric facilities if required; and

- High Tension Line spotters may be onsite during construction activities.

5.4 Access Roads

The Project is proposed on existing roadways. It is anticipated that the existing roadway will be adequate for access and that the construction of access roads outside the roadway layout will not be necessary.

5.5 Pipe Yards

It is anticipated that the existing NG operating facility in South Yarmouth will be utilized for the Project. If additional pipeyards are deemed necessary by the Contractor, all appropriate erosion control measures will be utilized and all disturbed areas will be restored and revegetated, as required.

5.6 Inadvertent Disturbance off Right-of-Way

NG will restrict all activities to the permitted construction ROW. However, under extreme circumstances (e.g., while working on steep slopes in slippery conditions and while grading on steep side hills), some inadvertent disturbance may occur outside the ROW. In the event that inadvertent off-ROW disturbance occurs, the following procedures will be implemented:

- The operator or foreman will immediately report the occurrence to a NG Inspector, who will notify the CI and EI. The EI will then notify the appropriate NG personnel;
- The conditions that caused the disturbance will be evaluated, and the CI and EI will determine whether work at the site can continue under those conditions;
- The nature of the off-ROW disturbance will be evaluated and corrective actions taken as deemed necessary by the CI and EI. Such measures may include immediate recontouring and seeding of the disturbed site, and/or installation of erosion control devices to contain the disturbance; and
- NG will notify the landowner and appropriate agencies of the disturbance.

Section 6.0

Specialized Construction Methods

6.0 SPECIALIZED CONSTRUCTION METHODS

NG will implement specialized techniques to construct under varying site conditions. The method most suitable for a given location is dependent upon site conditions at the time of construction. The CI, EI, and other NG inspectors will identify the appropriate method for each location based on site conditions at the time of construction and all specialized techniques affecting sensitive resources such as wetlands and/or water bodies will be approved by the appropriate regulatory agencies.

6.1 Residential Area Construction

The Project alignment abuts a number of residential areas; however, there are no anticipated permanent impacts to residential properties because the project area will be confined to the existing roadway layout (paved area and shoulder). Temporary impacts will be limited to altered traffic flow and the presence of construction vehicles and equipment within the roadway and shoulder (within 10 feet of the edge of pavement). NG will make every effort to ensure that construction activities minimize impacts to residences and that cleanup is timely and thorough.

Replacement main construction is expected to proceed at a rate of approximately 120 feet per day, with not more than 200 feet of trench open at any particular location. Based on this methodology, the duration of an open trench will generally be limited to approximately 100 feet on either side of an abutting residence. Once the pipe has been installed in the trench, the section will be backfilled. Safety fence or other barriers will be erected to limit access to construction areas as is deemed necessary. If there are any incidental impacts to the edge of a residential property, the area will be restored and all construction debris will be removed.

Homeowners will be notified in advance of any scheduled disruption of household utilities and the duration of the interruption will be minimized to the greatest extent practical. Representatives of the local utility companies will be on-site during construction, when necessary. NG will strive to accommodate special concerns regarding ornamental shrubs, trees, or structures by avoidance if such avoidances will not unduly interfere with construction and operation of the pipeline.

NG will take measures to ensure that construction activities will not prevent emergency vehicles access to residential areas. At least one lane of traffic will be maintained when constructing on or across residential streets. During the brief period when a road is completely cut, steel plates will be available on site to cover the open area to permit travel.

6.2 Bass River Crossing at Highbank Road Bridge

The Company expects that installation of the replacement main in a utility bay of the Highbank Road Bridge over the Bass River can be accomplished without an in-water vessel. However, it is possible that the installation of the replacement main on the bridge may require an in-water support vessel or, alternatively, scaffolding extended from the bridge deck to ensure proper placement of the main. This may require navigation to be temporarily limited. All required approvals will be secured, and the Company will coordinate as appropriate with the municipalities, MassDOT (which owns the bridge), and the Dennis Harbormaster to the extent such in-water activity is determined to be necessary for construction.

6.3 Culverted Stream Crossing

The proposed project will cross an existing stream culvert for Stony Brook on Stony Brook Road in Brewster, and will cross an existing stream culvert for the Herring River on Main Street in Harwich. The Project will not have any impacts on these waterbodies and no in-water work will be necessary. Following installation, grading of the roadway will match existing conditions.

The main objectives in proposing a particular culvert crossing method is the protection of the existing culvert and avoiding sedimentation to the culvert's receiving water. The pipeline will be installed above the existing culvert, and the culvert itself will not be affected. The following installation procedures will be followed for the culvert crossings:

1. Culverts will be clearly marked in advance of construction activities. Marking will be made using paint on the pavement or stakes on the shoulder of the road. The markings must be maintained until all work in the area has been completed.

2. Haybales, wood chip bags, or other appropriate erosion controls will be set to protect the stream channel from any construction related runoff.

3. Disturbing soil that might be discharged through or near the culvert will be avoided.

4. Once excavation locates the culvert, digging with machinery will cease.

Other procedures which will take place during the culvert crossing will include regular inspection and maintenance of erosion and sedimentation controls, regular inspection of supports to ensure that there is no stress to the existing culvert, and an assessment of whether floating silt curtain or other measure should be implemented on the downstream side of the culvert should sedimentation be an issue.

6.4 EQUIPMENT CROSSOVERS

At an equipment crossover, the working side of the ROW is temporarily shifted to the other side of the ROW. Equipment crossovers are used to enhance constructability and/or to reduce impacts to sensitive areas such as residential, wetland, and archaeological sites.

The use of equipment crossovers are reserved for extreme circumstances because of the requirements for the construction equipment to work backwards and for the necessity of padding

any existing parallel utility lines that equipment may crossover.

6.5 Wellhead Protection Area Crossing

Portions of the Project route pass through MassDEP-approved Zone II[1] areas. These are wellhead protection areas determined by hydro-geologic modeling and approved under MassDEP's Drinking Water Program. Portions of the route that pass through Zone II areas include the western portion of the Yarmouth-Dennis Segment, the eastern half of the Harwich Segment (including the southern spur), and the middle portion of the Brewster Segment. The route is not located near any Interim Wellhead Protection Areas. There are no MassDEP-approved Zone I[2] areas within 500 feet of the Project route.

The Project will have no impacts on water supplies. Nearly all vehicle fueling and all major equipment maintenance will be performed off-site at commercial service stations or a contractor's yard. A few pieces of large, less mobile equipment (e.g., excavators, paving equipment) will be refueled as necessary on-site. Any such field refueling will not be performed within 100 feet of wetlands waterways, or within 100 feet of known private or community potable wells. The fuel transfer operation will be conducted by an operator knowledgeable about the equipment, the location, and with the use of the work zone spill kit. Proper spill containment gear and absorption materials will be maintained for immediate use in the event of any inadvertent spills or leaks. During construction, equipment will be inspected for incidental leaks (e.g., hydraulic fluid, diesel fuel, gasoline, anti-freeze) prior to site access and on a daily basis at the commencement of each work shift. Small pieces of powered equipment such as generators and pavement saws will be placed in containment bins or on absorbent blankets or pads to contain any accidental fuel spills or leaks. These measures will protect the water resources along the Project route while also allowing efficient construction procedures. NG and its contractors will follow the spill prevention measures described in Section 8.0. Hazardous materials, chemicals, fuels or lubricating oils will not be stored within 100 feet of a wetland or waterbody boundary, and concrete coating activities (except field joints) will not be conducted within 100 feet of a wetland or waterbody boundary.

---

[1] As defined in 310 CMR 22.02, Zone II *"means that area of an aquifer that contributes water to a well under the most severe pumping and recharge conditions that can be realistically anticipated (180 days of pumping at approved yield, with no recharge from precipitation)... The Zone II must include the entire Zone I area..."*

[2] As defined in 310 CMR 22.02, Zone I *"means the protective radius required around a public water supply well or Wellfield..."*

There are no hazardous liquids associated with operation of the Project.

6.6 Wetland Crossings

The Project will have no direct impacts to wetland resource areas, and waterbody crossings will be accomplished either by installation in a utility bay of an existing bridge (e.g., Highbank Road Bridge above the Bass River) or installation in the road bed above existing culverts.

In no event shall any activity shall occur within wetland resource areas or buffer zone without authorization under the Massachusetts Wetland Protection Act and applicable local wetland bylaws.

6.6.1 General Conditions for Wetland Crossings

Additional workspace at wetland crossings will be minimized and located at least 50 feet from the edge of the wetland where topographic conditions permit. No refueling of construction vehicles will occur within 100 feet of any wetland resource area. The wetlands and setbacks will be clearly marked in the field prior to the start of construction. NG and its contractors will follow the spill prevention measures described in Section 8.0. Hazardous materials, chemicals, fuels, or lubricating oils will not be stored nor will concrete coating activities (except field joints) be conducted within 100 feet of a wetland or waterbody boundary.

Where the Project passes through wetland buffer zones, the replacement main will be installed beneath the paved roadway, and no clearing or grading will be necessary. Construction equipment will be kept on the paved surface within the buffer zones.

The Project will have no direct impacts to wetland resource areas, and appropriate deployment of erosion control BMPs will ensure no indirect impacts. Post-installation contours and elevations will match existing conditions such that the Project will not alter drainage patterns.

Section 7.0

Potential Storm Water Pollutant Sources and Control Measures

7.0 POTENTIAL STORM WATER POLLUTANT SOURCES AND CONTROL MEASURES

Pollutants from various sources have the potential to enter the storm water system during project construction. A description of these potential pollutants and control measures to reduce the risk of storm water contamination is provided below.

7.1 Construction Dust and Silt Control

The project site is comprised of existing local roadways. Fugitive dust may be generated during dry weather conditions, but will be controlled along the pipeline route by the use of appropriate construction methods including watering of soils susceptible to wind erosion, covering trucks that contain excavated soils, and stabilizing erodible soils with filter fabric. BMPs will be followed throughout the period of construction.

Proximate to wetland resource areas or buffer zone, or wherever surface water runoff has the potential to occur, silt barriers (fences) will be installed along the ROW to control offsite discharges of silt. The silt barrier will be installed after the clearing and grubbing necessary for placement of the silt barrier is completed but before the clearing and grubbing of the remaining work area is started. The silt barrier will remain in place until the up-slope surface is permanently stabilized. If construction in a particular area will cease temporarily, temporary soil stabilization will be implemented no more than 7 days after the construction has ceased unless activity will resume in that area within 21 days. Permanent stabilization will take place no later than 7 days after construction activities have permanently ceased in an area.

7.2 Offsite Sediment Tracking

The construction zone will be kept relatively free of excess mud, dirt, and rock tracked from staging or other areas.

7.3 Petroleum Products

Construction equipment utilizes diesel fuel and oil so the potential exists for spills or leaks. All on-site vehicles will be monitored for leaks and receive regular preventative maintenance to ensure proper operation and reduce the chance of leaks. Fueling operations are addressed in Section 6.5, above, and Section 8.1.3, below.

Petroleum products will be stored in clearly labeled and tightly sealed containers or tanks. Any asphalt used onsite will be applied according to the manufacturer's recommendations. Any soil contaminated by fuel or oil spills will be removed and disposed of to an approved disposal site.

7.4 Sanitary Wastes

A licensed sanitary waste management contractor will collect all construction or temporary sanitary wastes from portable units, if used. The units will be maintained on a regular basis.

7.5 Hazardous Wastes

All hazardous wastes will be disposed of according to local or state regulation or the

manufacturer's recommendations. Site personnel will be instructed of these regulations and recommendations and the Owner's Site Representative will be responsible for their implementation. A SPCC Plan appears as Section 8.0 of this ECP.

7.6 Paints

All paint containers, if utilized, will be tightly sealed and properly stored away from the ROW to prevent leaks or spills. Paint will not be discharged to the storm water system. Unused paints will be disposed of according to local or state regulations or the manufacturer's recommendations. Spray painting will not occur on windy days and a drop cloth will be used to collect and dispose of drips and over-spray associated with all painting activities.

7.7 Concrete Trucks

Concrete trucks will not be allowed to discharge surplus concrete or drum wash water within the ROW work zone. No concrete mixing, washing of equipment used for mixing, pouring, or casting will be performed within 100 feet of a wetland resource or in any area where contaminants from the concrete could reach a watercourse or wetland (unless no practical alternative exists). Concrete trucks will not be washed within the work zone.

7.8 Solid Waste

All construction solid waste will be collected, deposited and stored in metal dumpsters from a licensed solid waste management contractor. Trash will be removed from the work zone every day. No construction waste materials will be buried within the trench.

7.9 Allowable Non-Stormwater Discharges

The following sources of non-storm water discharges from project construction activities may be combined with storm water discharges:

- Waters used to control dust;
- Pavement wash waters not containing toxic or hazardous substances;
- Uncontaminated dewatering discharges;
- Firefighting waters;
- Vegetation watering; and
- Potable or spring water discharges.

7.10 Best Management Practices

Chemicals and petroleum products will be employed during construction. BMPs such as good housekeeping measures, inspections, containment, and spill prevention practices will be used to limit contact between storm water and potential pollutants.

Good Housekeeping

All construction personnel will be responsible for monitoring and maintaining housekeeping tasks or notifying the appropriate person of a problem. The good housekeeping practices listed below will be followed to reduce the risk of potential pollutants entering storm water discharges:

- Store only enough product to do the job;
- Store all materials in a neat and orderly manner, in the appropriate containers and, if possible, under a roof or within an enclosure;
- Keep products in the original container with the original manufacturer's label;
- Do not mix products unless recommended by the manufacturer;
- Use all of a product before disposing of the container;
- Use and dispose of products according to the manufacturer's recommendations or the Owner's Site Representative's direction; and
- When and where appropriate, use posters, bulletin boards, or meetings to remind and inform construction personnel of required procedures.

Hazardous Materials

Storage areas for hazardous materials such as oils, greases, paints, fuels, and chemicals, will be provided with secondary containment to ensure that spills in these areas do not reach waters of the State. Contingencies for the proper disposal of contaminated soils shall be established (use of licensed hauler and approved landfill, for example) early in the construction period. The SPCC Plan (Section 8.0 below) shall be adhered to.

Section 8.0

Spill Prevention Control and Countermeasures Plan

8.0 SPILL PREVENTION CONTROL AND COUNTERMEASURES PLAN

8.1 Preventative Measures

The spill prevention control and countermeasures provisions listed in this section are based on approved spill control plans used successfully in the past. The ECP is comprehensive in that it addresses actions used to *prevent* spills in addition to specifying actions that will be taken should any spills occur including emergency notification procedures. The on-site EI is responsible for ensuring that Contractors implement and maintain spill control measures. The responsibilities of the EI are described in Section 3.0 of this ECP.

8.1.1 Training

The Contractor will instruct personnel on the operation and maintenance of equipment to prevent the accidental discharge or spill of fuel, oil, and lubricants. Personnel will also be made aware of the pollution control laws, rules, and regulations applicable to their work. Spill prevention briefings with the construction crew will be scheduled and conducted by the Contractor to ensure adequate understanding of spill prevention measures and National Grid's Release Response Procedure (see Appendix E). These briefings will highlight:

- Precautionary measures to prevent spills;
- Sources of spills, such as equipment failure or malfunction;
- Standard operating procedures in case of a spill;
- Equipment, materials, and supplies available for clean-up of a spill; and
- A list of known spill events.

A spill is an un-permitted release of product, raw materials, or chemicals outside any secondary containment and into the environment. Spills can occur as a result of leaks, accidents, or third-party incidents.

8.1.2 Equipment Inspection and Maintenance

The Contractor will inspect and maintain equipment that must be fueled and/or lubricated according to a strict schedule. All containers, valves, pipelines and hoses will be examined regularly to assess general conditions. The examination will identify any signs of deterioration or leaks that could potentially lead to a release of fluids. All leaks will be promptly corrected and/or repaired.

8.1.3 Refueling Operations

Nearly all vehicle fueling and all major equipment maintenance will be performed off-site at commercial service stations or a contractor's yard. A few pieces of large, less mobile equipment (e.g., excavators, paving equipment) will be refueled as necessary on-site. Any such field refueling will not be performed within 100 feet of wetlands waterways, or within 100 feet of known private or community potable wells. The fuel transfer operation will be conducted by an operator

knowledgeable about the equipment, the location, and with the use of the work zone spill kit. Proper spill containment gear and absorption materials will be maintained for immediate use in the event of any inadvertent spills or leaks. During construction, equipment will be inspected for incidental leaks (e.g., hydraulic fluid, diesel fuel, gasoline, anti-freeze) prior to site access and on a daily basis at the commencement of each work shift. Small pieces of powered equipment such as generators and pavement saws will be placed in containment bins or on absorbent blankets or pads to contain any accidental fuel spills or leaks.

The Contractor will ensure that all refueling is done pursuant to the following conditions, and that impact minimization measures and equipment will be sufficient to prevent discharged fluids from leaving the construction zone or reaching wetlands or waterbodies, and be readily available for use. These will include some combination of the following:

(a) dikes, berms or retaining walls sufficiently impervious to contain spilled oil;

(b) sorbent and barrier materials in quantities determined by the Contractor to be sufficient to capture the largest reasonably foreseeable spill;

(c) drums or containers suitable for holding and transporting contaminated materials;

(d) curbing;

(e) culverts, gutters, or other drainage systems;

(f) weirs, booms, or other barriers;

(g) spill diversion or retention ponds;

(h) sumps and collection systems;

(i) secondary containment of non-mobile pumps;

(j) The Contractor will prepare a list of the type, quantity, and storage location of containment and clean up equipment to be used during construction, and NG will approve this list prior to construction;

(k) All spills will be cleaned up immediately. Containment equipment will not be used for storing contaminated material; and

(l) Date and location of refueling activities will be documented and maintained by the contractor.

8.1.4 Storage

Storage containment areas will not have drains, unless such drains lead to a containment area or vessel where the entire spill can be recovered. The Contractor will ensure that bulk storage of hazardous materials, including chemicals, fuels, and lubricating oils will have appropriate secondary containment systems. Storage areas will not have drains unless such drains lead to a containment area or vessel where the entire spill can be recovered. No petroleum products or refueling equipment will be stored within 100 feet of a waterbody, wetland, or Wellhead Protection

Area. The containment area shall have a capacity of 1.5 times the maximum volume of the largest container. A berm or other suitable containment device will be installed around any storage shed housing potentially environmentally hazardous materials. The EI will designate specific areas where fuel trucks, mobile tanks, and lubricating vehicles will be parked when not in use.

8.1.5 Personnel Support

Prior to construction, the ROW inspector or agent shall identify and prepare a written inventory of water wells within 200 feet of the construction site.

8.2 Impact Minimization Measures

Containment is the immediate priority in the case of a spill. A spill will be contained on NG property or ROW, if possible. Cleanup procedures will begin immediately after a spill is contained. In no case will containment equipment be used to store contaminated material.

If a spill occurs, the construction crew shall safely contain it, utilizing construction equipment to containerize all spilled material, contaminated soil, and sorbent material in a manner consistent with the spilled materials' characterization. The Contractor will ensure the following measures are followed:

- Construction crew has on hand sufficient supplies of absorbent and barrier materials to allow the rapid containment and recovery of spilled materials and knows the procedure for reporting spills and unanticipated discovers of contaminate;
- Immediately report any spill or release of the following materials regardless of location (on-property or off-property) to the EI for notification to the appropriate NG representative as indicated below:
    - Oil or petroleum products;
    - Hazardous substances or hazardous wastes;
    - Chemicals;
    - Unplanned natural gas (flaring or venting); and
    - Asbestos-containing materials
- The EI shall notify the appropriate agencies, including the Massachusetts Department of Environmental Protection, if it is determined that a spill exceeds reportable quantity thresholds; and
- The National Response Center (1-800-424-8802) will be notified immediately if spills occur above specified threshold levels (40CFR 110.10) into surface waters and/or wetlands.

The following contacts are currently assigned to the Mid Cape Replacement Project and are subject to change:

National Grid Office (Waltham, MA)
General Office Number: (800) 235-0955
Emergency: (800) 231-5325
Legal Department: TBD
Environmental Engineer: TBD
Project Manager: Brad Wheeler, (781) 907-3147

The EI will ensure a remedial response contractor shall conduct the final clean-up and that all excavated wastes are transported to an approved disposal facility licensed to accept such wastes.

The Contractor will complete and submit to the EI a Spill Report, in the form attached in hereto.

8.3 Suggested Equipment List

The Contractor shall prepare a list of the type, quantity and location of storage or containment and clean up equipment to be used on the construction site. The list will include the procedures and impact minimization measures to be used in response to a spill. The Contractor's choice of impact minimization measures and equipment will be modified to meet the characteristics of the affected terrain as well as the types and amounts of material that could potentially be spilled. The types of equipment that NG expects to use to control spills at terrestrial sites and wetlands are described in Section 8.3.1 and Section 8.3.2 of this ECP, respectively. Material Safety Data Sheets shall be maintained on file at the field office.

8.3.1 Terrestrial Construction

General equipment that the Contractor will use for spill containment and cleanup on terrestrial areas includes:

- sorbents (pillows, socks, and wipe sheets) for containment and pick-up of spilled liquids;
- prepackaged, self-contained spill kits containing a variety of sorbents for small to large spills;
- structures such as gutters, culverts and dikes for immediate spill containment;
- shovels, backhoes, etc., for excavating contaminated materials;
- sumps and collection systems; and
- drums, barrels and temporary storage bags to clean up and transport contaminated materials.

Fuels and Lubricating Oil Storage

The Contractor will implement special measures to prevent spills in areas where trucks carrying fuel and oil barrels are loaded. Containment equipment will be kept close to tanks and barrels to minimize spill response time, and will include absorbent pads or mats. The quantity and capabilities of the mats will be sufficient to capture the largest foreseeable spill, given ROW or workspace characteristics, crankcase and other fuel vessel capacities

Routine Refueling and Maintenance

As discussed at Section 8.1.3 above, nearly all vehicle fueling and all major equipment maintenance will be performed off-site at commercial service stations or a contractor's yard. A few pieces of large, less mobile equipment (e.g., excavators, paving equipment) will be refueled as necessary on-site. Any such field refueling will not be performed within 100 feet of wetlands waterways, or within 100 feet of known private or community potable wells. Absorbent pads and mats will be placed on the ground beneath equipment before refueling and maintenance. Equipment that will be stored on-site for routine refueling and maintenance includes small sorbent kits (or their functional equivalent).

Equipment Failure

Kits with the capacity of absorbing up to 5 gallons of liquid can fit beneath the operator's seat on construction equipment for use in an equipment failure.

8.3.2 Waterbody and Wetland Crossings

For each wetland and water body crossed (within the roadway layout), the equipment listed below will be available, in addition to that needed for terrestrial construction. This equipment will be stored close to the water or wetland to minimize response time, and will include:

[details to be confirmed prior to construction]

Section 9.0

Air Quality and Noise

9.0 AIR QUALITY AND NOISE

9.1 Ambient Air Quality Protection

All construction to be performed in accordance with applicable sections of the MassDEP Air Pollution Control Regulations at 310 CMR 7.02 and 310 CMR 7.09. Specific air quality mitigation measures include:

- Use of appropriately designed wheel wash facilities as necessary to prevent off-site migration of soils;
- Mechanical street sweeping of construction areas and surrounding streets and sidewalks as necessary;
- Removal of construction waste in covered or enclosed trailers;
- Wetting of exposed soils and stockpiles to prevent dust generation;
- Minimizing stockpiling of materials on site;
- Turning off construction equipment when not in use and minimizing idling times;
- Minimizing the storage of construction waste on site; and
- Minimizing the duration that soils are left exposed.

Many of these measures are intended to minimize potential impacts associated with construction activities that may generate fugitive dust and result in localized increases in airborne particulate levels. Fugitive dust emissions from construction activities will depend on such factors as the properties of the emitting surfaces (e.g., moisture content and volume of spoils), meteorological variables, and construction practices employed.

Although fugitive dust may be generated during construction activities, the relatively short duration of construction at any single location for this Project makes it unlikely that the migration of dust will cause off-site impacts. Furthermore, soil excavation does not typically generate dust due to the natural moisture content of subsurface soils. Nonetheless, the contractor will implement dust control measures as needed during active construction that will primarily consist of street sweeping and using wetting agents to control and suppress dust. The contractor will comply with the National Emission Standards for Hazardous Pollutants ("NESHAP") throughout construction activities.

Pavement will be cut with a pavement saw, which cuts a trench line in the pavement and across driveways and any intersecting roadways. Pavement will then be removed, trucked away and disposed of in accordance with applicable regulations. No pavement crushing will occur on-site.

The Company requires contractors to use ultra-low sulfur diesel ("ULSD") in off-road diesel vehicles, and the Company will comply with the requirements of MassDEP's Diesel Retrofit Program. The Diesel Retrofit Program, formerly called the Clear Air Construction Initiative of the Clean Construction Equipment Initiative, originated as an air quality mitigation measure for the

Central Artery/Tunnel Project. The program encourages users of diesel construction equipment to install exhaust emission controls such as oxidation catalysts or particulate filters on their diesel engines. While MassDEP requires participation in the Diesel Retrofit Program by municipalities applying for funding under the State Revolving Fund for water and wastewater projects, there is no MassDEP requirement for participation by other project proponents.

All diesel-powered non-road construction equipment with engine horsepower ratings of 50 and above to be used for 30 or more days over the course of Project construction will either be EPA Tier 4–compliant or will have EPA-verified (or equivalent) emission control devices such as oxidation catalysts or other comparable technologies (to the extent that they are commercially available) installed on the exhaust system side of the diesel combustion engine.

In addition, vehicle idling will be minimized in accordance with Massachusetts' anti-idling law, G.L. c. 90, § 16A, c. 111, §§ 142A–142M, and 310 C.M.R. 7.11. The Company requires the use of ULSD in its diesel-powered construction equipment and limits idling time to five minutes except when engine power is necessary for the delivery of materials or to operate accessories to the vehicle such as power lifts. The Company will require its contractors to follow these procedures.

9.2 Construction Noise Management and Mitigation

While intermittent increases in noise levels are expected during construction activities, the Company is committed to minimizing these impacts. Construction-related noise levels will comply with applicable sections of MassDEP's Air Quality Regulations at 310 CMR 7.10, particularly subsections (1) and (2), which pertain to the use of sound-emitting equipment in a considerate manner as to reduce unnecessary noise. The Project will make every reasonable effort to minimize noise impacts from construction. The Towns of Yarmouth, Dennis, Harwich, and Brewster have no bylaws applicable to construction-related noise.

Noise mitigation measures include:

- Minimizing the amount of work conducted outside of typical construction hours;
- Ensuring that appropriate mufflers are installed and maintained on construction equipment;
- Ensuring appropriate maintenance and lubrication of construction equipment to provide the quietest performance;
- Requiring muffling enclosures on continuously-operating equipment such as air compressors and welding generators;
- Turning off construction equipment when not in use and minimizing idling times; and
- Mitigating the impact of noisy equipment on sensitive locations by using shielding or buffering distance to the extent practical.

Blasting is not anticipated.

Appendix A

Construction Drawings (to be completed)

Appendix B

Erosion Control Drawings

TOWN OF YARMOUTH
BARNSTABLE COUNTY, MASSACHUSETTS

PLAN REFERENCES:

NATIONAL GRID GAS MID CAPE MAIN REPLACEMENT CONSTRUCTION DRAWINGS BY CHA, DATED 4-1-16

DATUM NOTE:

ELEVATIONS SHOWN HEREON ARE BASED ON THE NORTH AMERICAN VERTICAL DATUM 1988 (NAVD 1988)

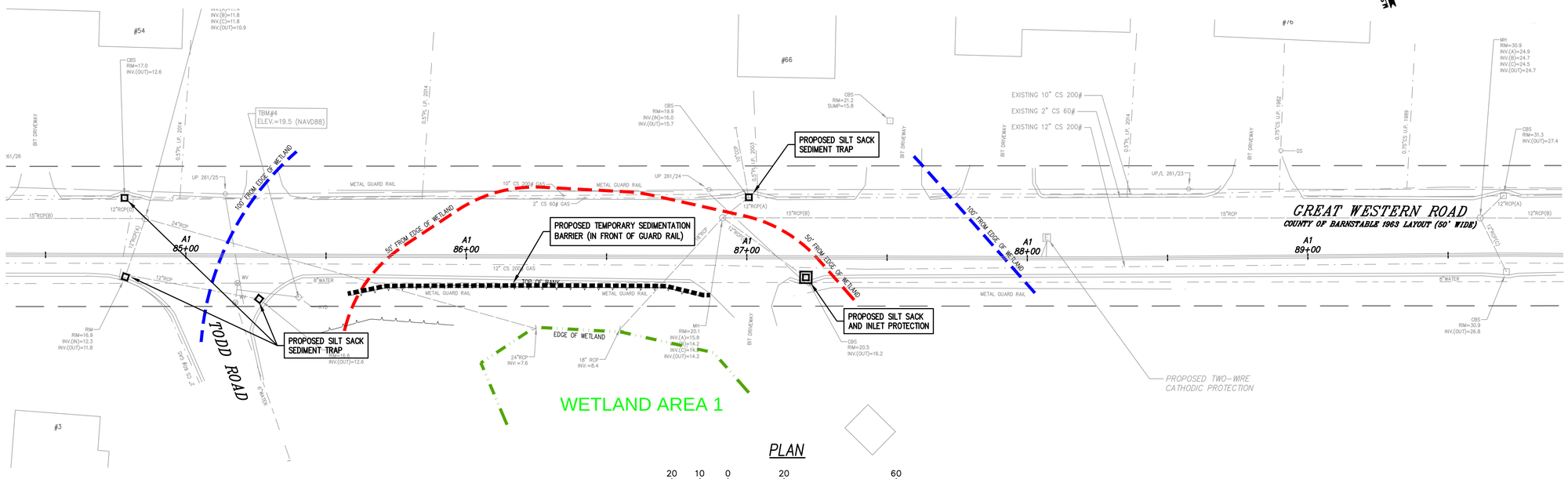

PLAN

20 10 0 20 60

1 inch = 20 ft.

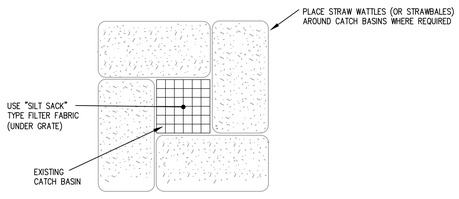

PLAN VIEW

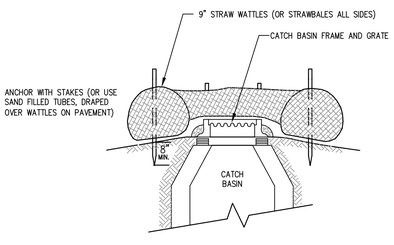

SECTION VIEW

INLET PROTECTION NOTES:

1. ENCLOSE STRUCTURE WITH STRAW BALES OR STRAW WATTLES. MAINTAIN UNTIL PAVING BINDER COURSE IS COMPLETE OR A PERMANENT STAND OF GRASS HAS BEEN ESTABLISHED, IF APPLICABLE.
2. IF GRATE IS AGAINST EXISTING CURB THEN STRAW WATTLES ARE TO BE PLACED AROUND THREE SIDES OF GRATE ONLY.

3. GRATE TO BE PLACED OVER FILTER FABRIC.

4. WATTLES SHALL BE INSPECTED PERIODICALLY AND AFTER ALL STORM EVENTS AND REPAIR OR REPLACEMENT SHALL BE PERFORMED PROMPTLY IF NEEDED.

CATCH BASIN INLET PROTECTION DETAIL

NOT TO SCALE

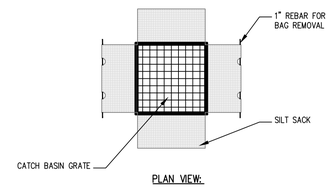

PLAN VIEW:

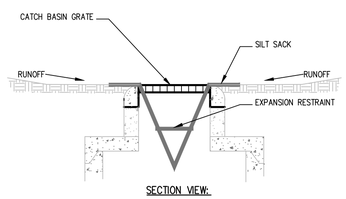

SECTION VIEW:

GENERAL NOTES:

1. USE "SILT SACK" OR APPROVED EQUAL BY NATIONAL GRID.
2. GRATE IS TO BE SET OVER SILT SACK.
3. INSPECT AND EMPTY SILT SACK AS NECESSARY.

SILT SACK DETAIL

NOT TO SCALE

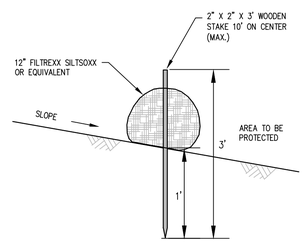

STRAW WATTLE SEDIMENTATION CONTROL BARRIER DETAIL

NOT TO SCALE

CONSTRUCTION NOTES:

1. ALL AREAS EXCAVATED SHALL BE BACKFILLED ON THE SAME DAY.

2. ALL DISTURBED PAVED AREAS SHALL BE REPAVED ON THE SAME DAY OF INSTALLATION, TO THE EXTENT PRACTICABLE. NON-PAVED DISTURBED AREAS TO BE RESTORED IN KIND.

3. ALL MATERIAL EXCAVATED DURING TRENCHING SHALL BE TEMPORARILY STORED ON THE ROAD, TO THE EXTENT PRACTICABLE.

4. PRIOR TO CONSTRUCTION, INSTALL TEMPORARY SEDIMATION BARRIER IN LOCATION(S) SHOWN ON PLAN. SEDIMENTATION BARRIER TO BE DOUBLE-STAKED STRAW WATTLES OR AS OTHERWISE REQUIRED BY THE CONSERVATION COMMISSION. WATTLES TO BE REMOVED IMMEDIATELY AFTER COMPLETION OF GAS MAIN INSTALLATION AND RE-PAVING/ STABILIZATION OF DISTURBED AREAS.

5. PROPOSED SEDIMENTATION BARRIER(S) REPRESENTS WORK LIMIT LINES. IN AREAS WITHOUT SEDIMENTATION BARRIERS, WORK LIMIT LINE IS TO BE 4' EITHER SIDE OF PROPOSED GAS MAIN AS SHOWN ON PLAN.

6. CATCH BASIN PROTECTION: CONTRACTOR TO PROTECT ALL CATCH BASINS IN WORK AREA WITH "SILT SACK" TYPE LINER, UNDER GRATES, DURING PIPELINE INSTALLATION AND, IN NOTED AREAS, ADDITIONAL "INLET PROTECTION" MEASURES (SEE DETAILS).

7. SEE CONSTRUCTION PROTOCOL, TO BE FILED WITH THE LOCAL CONSERVATION COMMISSIONS, IF REQUIRED, FOR ADDITIONAL CONDITIONS AND DEWATERING PROTOCOL.

8. AT THE CROSSING POINT, THE PROPOSED GAS MAIN IS TO BE INSTALLED ABOVE THE EXISTING DRAINAGE CULVERTS. FIELD CHANGES MAY BE REQUIRED.

CONSTRUCTION PROTOCOL:

1. PRIOR TO COMMENCEMENT OF CONSTRUCTION, A DOUBLE-STAKED STRAW WATTLE SEDIMENTATION BARRIER IS TO BE PLACED ALONG THE EDGE OF THE WORK AREA, AS SHOWN ON THE PLAN, WHERE WORK IS CLOSEST TO THE RESOURCE AREA. ADDITIONAL TEMPORARY SEDIMENTATION BARRIERS, AS SHOWN ON THE PLAN, MAY BE REQUIRED AS REQUESTED BY THE LOCAL CONSERVATION COMMISSION OR ENGINEER.

2. CONTRACTOR SHALL NOTIFY THE ENGINEER AND LOCAL CONSERVATION COMMISSION, PRIOR TO INSTALLATION OF THE GAS MAIN. ENGINEER TO INSPECT SEDIMENTATION BARRIERS, PRIOR TO INSTALLATION OF THE GAS MAIN. PRE- CONSTRUCTION PHOTOS TO BE TAKEN.

3. EXCAVATED SOILS FROM MACHINE TRENCHING OPERATIONS TO BE TEMPORARILY STORED TO THE UPLAND SIDE OF THE SEDIMENTATION BARRIER, ON THE ROADWAY.

4. ALL EXCAVATED AREAS SHALL BE BACKFILLED AND COMPACTED ON THE SAME DAY. PRE-EXISTING PAVED AREAS TO BE RE-PAVED.

5. ANY EXCAVATED MATERIAL ACCUMULATED AT THE SEDIMENTATION BARRIER TO BE REMOVED DAILY.

6. NON-PAVED OR NON-GRAVEL/DIRT ROAD DISTURBED AREAS TO BE STABILIZED AND RESTORED TO PRE-INSTALLATION CONDITIONS, INCLUDING LOAMING AND SEEDING, IF NECESSARY.

7. ENGINEER TO PERFORM A POST-INSTALLATION INSPECTION. ENGINEER TO PROVIDE CONSERVATION COMMISSION WITH POST-CONSTRUCTION PHOTOS AND NOTED VARIATIONS, UPON THE COMPLETION OF THE WORK.

8. DEWATERING: WORK SHOULD BE LIMITED TO PERIODS OF LOWER SEASONAL GROUNDWATER LEVELS, TO THE EXTENT PRACTICABLE. ANY DISCHARGE FROM EXCAVATION DEWATERING OPERATIONS SHALL BE DIRECTED UP GRADIENT FROM THE STAKED STRAW WATTLE SEDIMENTATION BARRIER. REMOVE SILT/SEDIMENT ACCUMULATIONS ALONG THE SEDIMENTATION BARRIER AS NECESSARY.

SEEE CHA SHEET 118

COASTAL engineering co.
260 Cranberry Hwy, Orleans, MA 02653
508.255.6511 P 508.255.6700 F

NO.	DATE	REVISION	BY

SEAL

DRAFT

PROJECT
NATIONAL GRID
GREAT WESTERN ROAD (STA. 85+50 - 87+25)
YARMOUTH, MA

SHEET TITLE
ENVIROMENTAL EROSION CONTROL PLAN

SCALE	AS NOTED
DRAWING FILE	EEC-118.dwg
DATE	4-15-16
DRAWN BY	MAP
CHECKED BY	

EEC-118

1 OF 10 SHEETS

PROJECT NO. C18274.00

Coastal Engineering Co., Inc. © 2016

F:\SDSK\PROJ\C18000\C18274\C18274-00\XREFS\29847 - Cape Cod - MID CAPE\EEC-118.dwg Apr 15, 2016 - 3:22pm

TOWN OF DENNIS
BARNSTABLE COUNTY, MASSACHUSETTS

PLAN REFERENCES:

NATIONAL GRID GAS MID CAPE MAIN REPLACEMENT CONSTRUCTION DRAWINGS BY CHA, DATED 4-1-16

DATUM NOTE:

ELEVATIONS SHOWN HEREON ARE BASED ON THE NORTH AMERICAN VERTICAL DATUM 1988 (NAVD 1988)

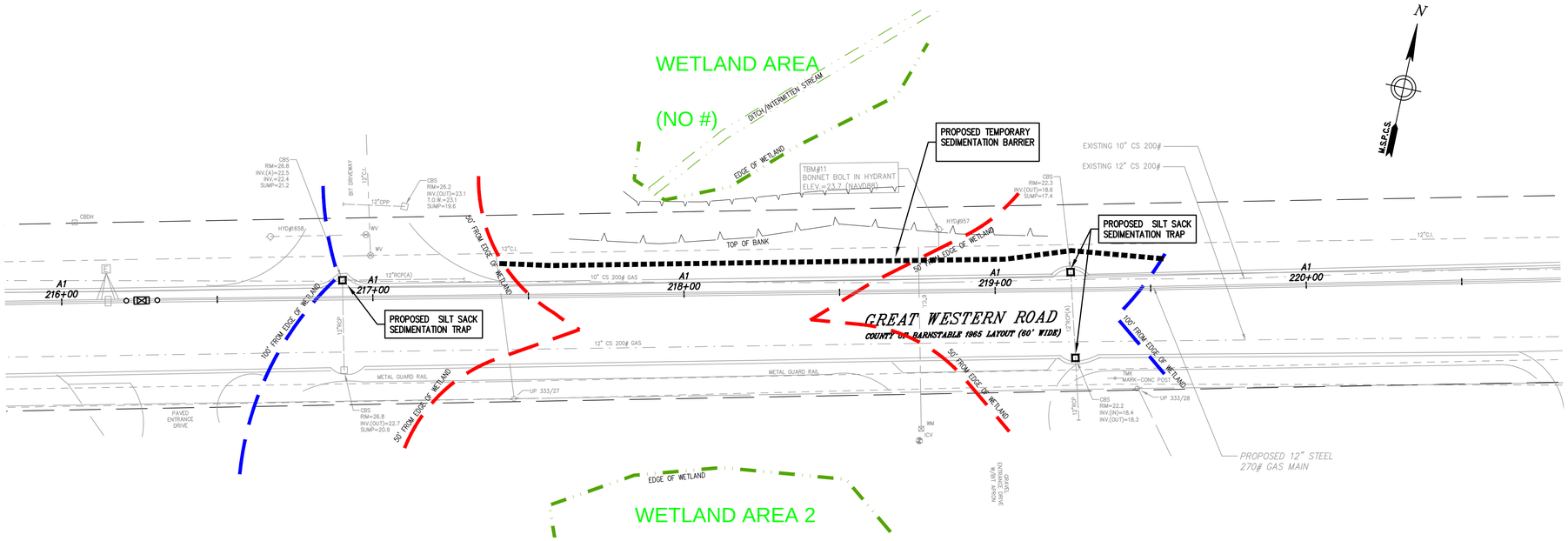

PLAN

20 10 0 20 60

1 inch = 20 ft.

SEEE CHA SHEET 144

COASTAL engineering co.
260 Cranberry Hwy, Orleans, MA 02653
508.255.6511 P 508.255.6700 F

NO.	DATE	REVISION	BY

SEAL

DRAFT

PROJECT
NATIONAL GRID
GREAT WESTERN ROAD (STA. 216+90 - STA. 219+60)
DENNIS, MA

SHEET TITLE
ENVIROMENTAL EROSION CONTROL PLAN

SCALE	AS NOTED
DRAWING FILE	EEC-144.dwg
DATE	4-15-16
DRAWN BY	MAP
CHECKED BY	

EEC-144

2 OF 10 SHEETS

PROJECT NO. C18274.00

Coastal Engineering Co., Inc. © 2016

F:\STDSKPROJ\C18000\C18274\C18274-00\XREFS\29847 - Cape Cod - MID CAPE\EEC-144.dwg Apr 15, 2016 - 3:18pm

TOWN OF BREWSTER
BARNSTABLE COUNTY, MASSACHUSETTS

PLAN REFERENCES:

NATIONAL GRID GAS MID CAPE MAIN REPLACEMENT CONSTRUCTION DRAWINGS BY CHA, DATED 4-1-16

DATUM NOTE:

ELEVATIONS SHOWN HEREON ARE BASED ON THE NORTH AMERICAN VERTICAL DATUM 1988 (NAVD 1988)

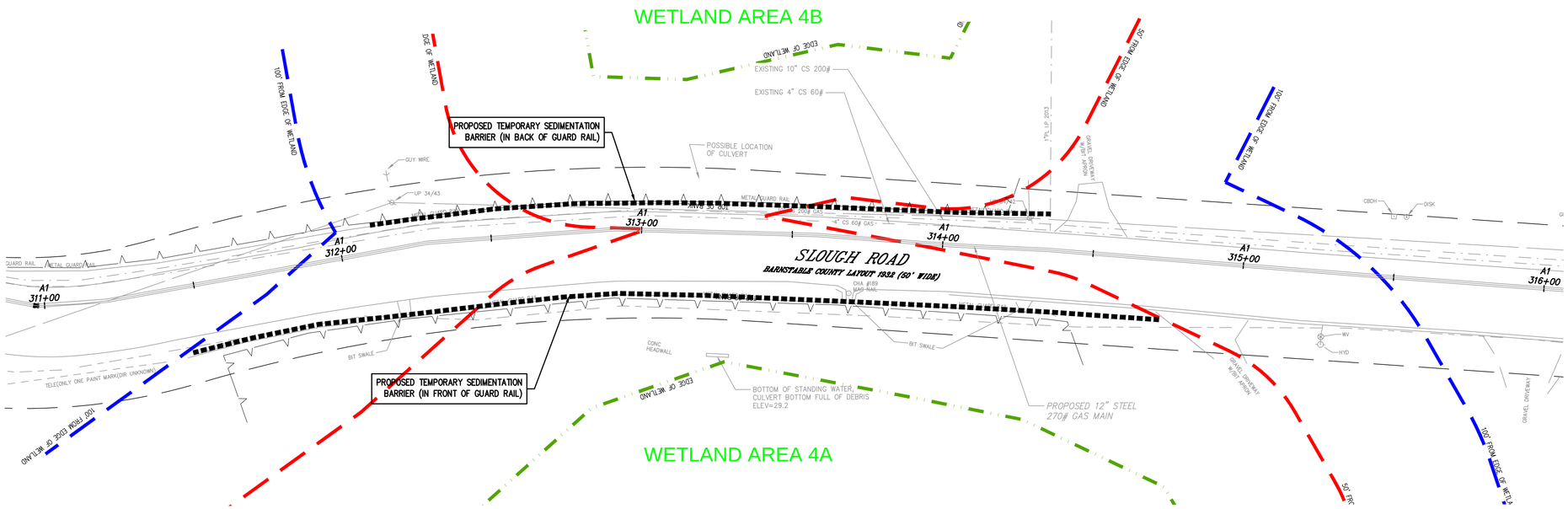

PLAN

20 10 0 20 60

1 inch = 20 ft.

SEEE CHA SHEET 161

COASTAL engineering co.
260 Cranberry Hwy, Orleans, MA 02653
508.255.6511 P 508.255.6700 F

NO.	DATE	REVISION	BY

SEAL

DRAFT

PROJECT
NATIONAL GRID
SLOUGH ROAD (STA. 311+50 - 314+75)
BREWSTER, MA

SHEET TITLE
ENVIROMENTAL EROSION CONTROL PLAN

SCALE	AS NOTED
DRAWING FILE	EEC-161
DATE	4-15-16
DRAWN BY	MAP
CHECKED BY	

EEC-161

3 OF 10 SHEETS

PROJECT NO. C18274.00

Coastal Engineering Co., Inc. © 2016

F:\DISKPRO\C18000\C18274\C18274.00\XREFS\28847 - Cape Cod - MID CAPE\EEC-161.dwg Apr 15, 2016 - 3:07pm

TOWN OF BREWSTER
BARNSTABLE COUNTY, MASSACHUSETTS

SEEE CHA SHEET 164

PLAN REFERENCES:

NATIONAL GRID GAS MID CAPE MAIN REPLACEMENT CONSTRUCTION DRAWINGS BY CHA, DATED 4-1-16

DATUM NOTE:

ELEVATIONS SHOWN HEREON ARE BASED ON THE NORTH AMERICAN VERTICAL DATUM 1988 (NAVD 1988)

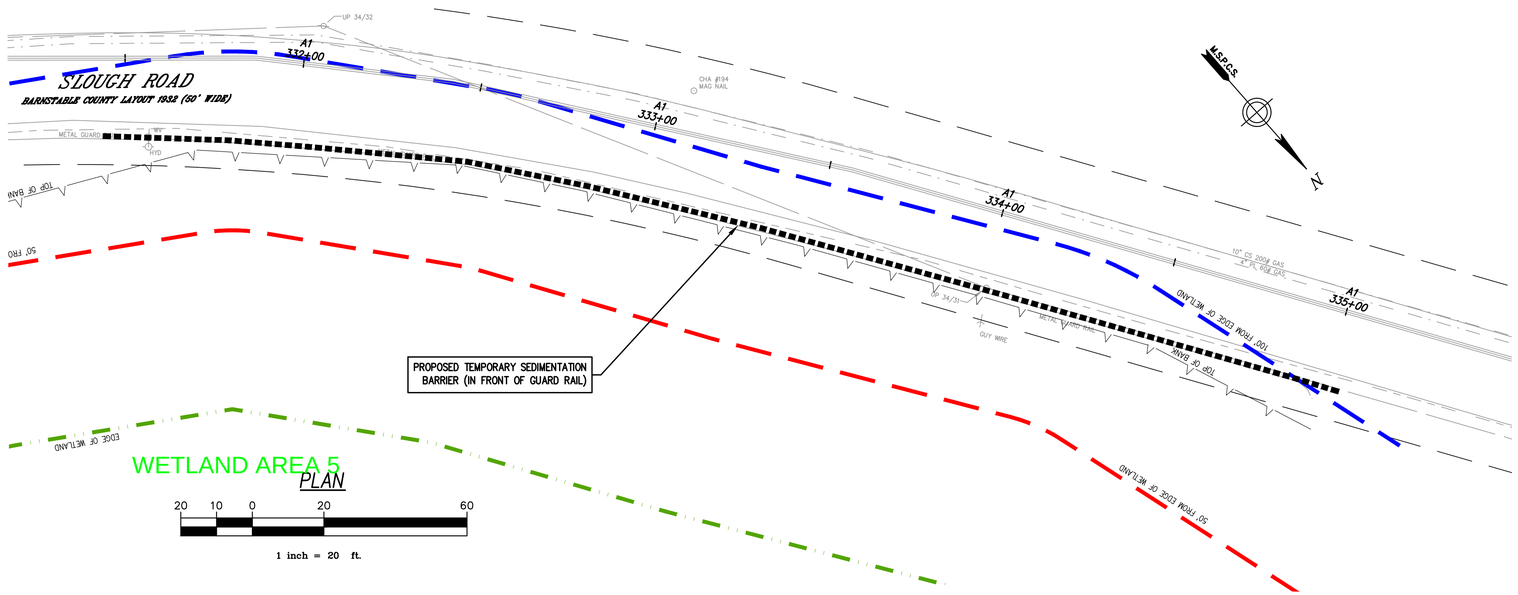

PLAN

20 10 0 20 60

1 inch = 20 ft.

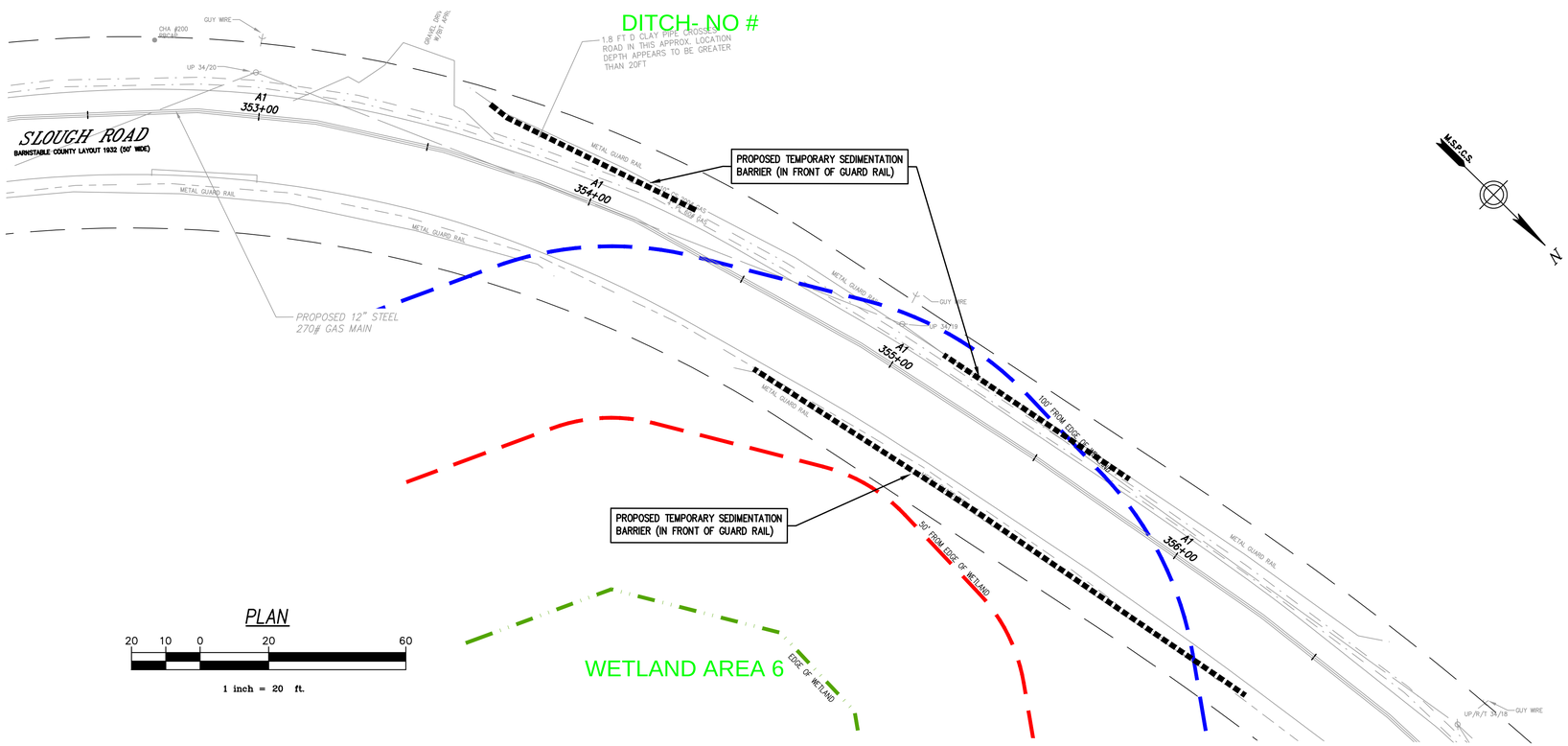

PLAN

20 10 0 20 60

1 inch = 20 ft.

SEEE CHA SHEET 168

COASTAL engineering co.
260 Cranberry Hwy, Orleans, MA 02653
508.255.6511 P 508.255.6700 F

NO.	DATE	REVISION	BY

SEAL

DRAFT

PROJECT
NATIONAL GRID
SLOUGH ROAD (STA. 331+50 - STA.335+00; STA. 353+50 - 356+50)
BREWSTER, MA

SHEET TITLE
ENVIROMENTAL EROSION CONTROL PLAN

SCALE	AS NOTED
DRAWING FILE	EEC-168.dwg
DATE	4-15-16
DRAWN BY	MAP
CHECKED BY	

EEC-168

4 OF 10 SHEETS

PROJECT NO. C18274.00

Coastal Engineering Co., Inc. © 2016

F:\SDSK\PROJ\C18000\C18274\C18274-00\XREFS\29847 - Cape Cod - MID CAPE\EEC-168.dwg Apr 15, 2016 - 3:02pm

TOWN OF BREWSTER
BARNSTABLE COUNTY, MASSACHUSETTS

PLAN REFERENCES:

NATIONAL GRID GAS MID CAPE MAIN REPLACEMENT CONSTRUCTION DRAWINGS BY CHA, DATED 4-1-16

DATUM NOTE:

ELEVATIONS SHOWN HEREON ARE BASED ON THE NORTH AMERICAN VERTICAL DATUM 1988 (NAVD 1988)

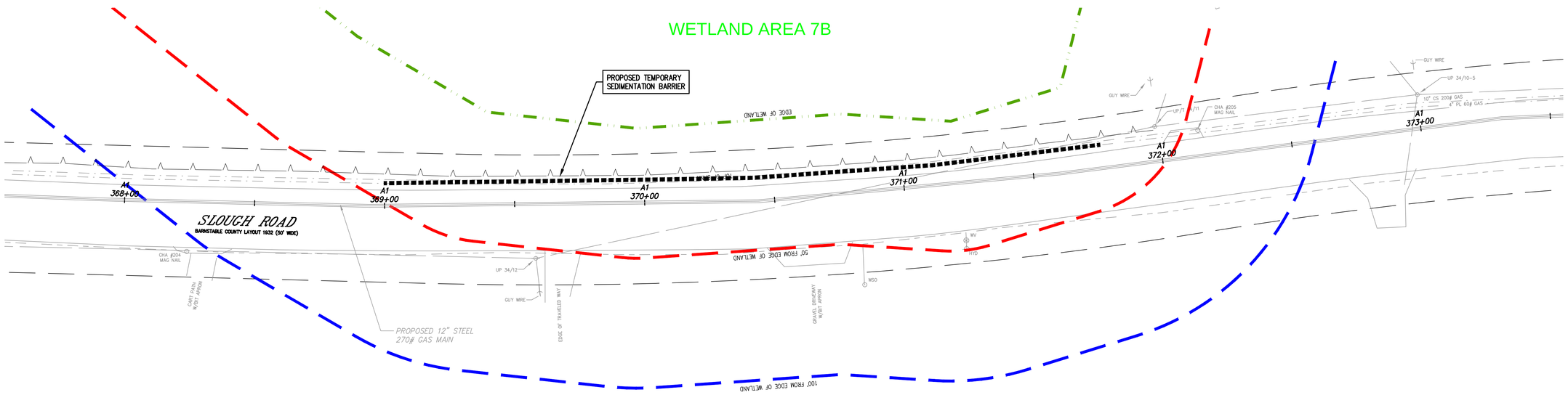

PLAN

20 10 0 20 60

1 inch = 20 ft.

SEEE CHA SHEET 171

F:\DISKPROJ\C18000\C18274\C18274.00\XREFS\20847 - Cape Cod - MID CAPE\EEC-171.dwg Apr 15, 2016 - 2:50pm

COASTAL engineering co.
260 Cranberry Hwy, Orleans, MA 02653
508.255.6511 P 508.255.6700 F

NO.	DATE	REVISION	BY

SEAL

DRAFT

PROJECT
NATIONAL GRID
SLOUGH ROAD (STA. 369+00 - 371+75)
BREWSTER, MA

SHEET TITLE
ENVIROMENTAL EROSION CONTROL PLAN

SCALE	AS NOTED
DRAWING FILE	EEC-171.dwg
DATE	4-15-16
DRAWN BY	MAP
CHECKED BY	

EEC-171

5 OF 10 SHEETS

PROJECT NO. C18274.00

Coastal Engineering Co., Inc. © 2016

SEEE CHA SHEET 172

TOWN OF BREWSTER
BARNSTABLE COUNTY, MASSACHUSETTS

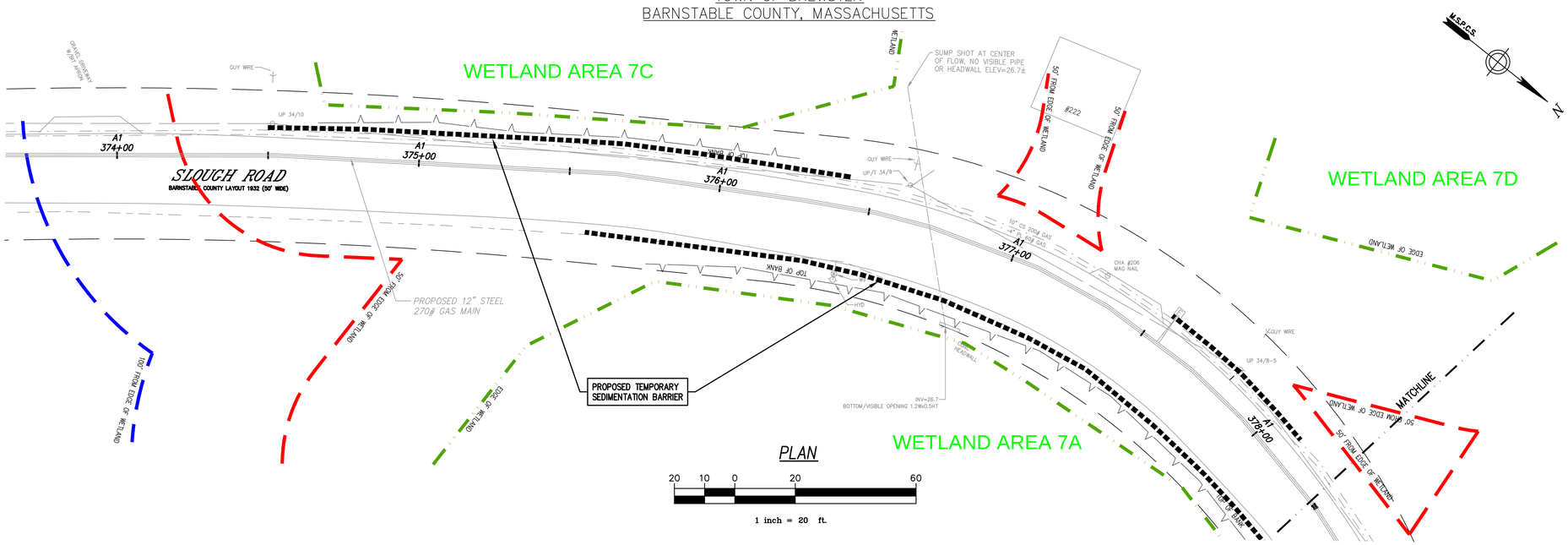

PLAN

20 10 0 20 60

1 inch = 20 ft.

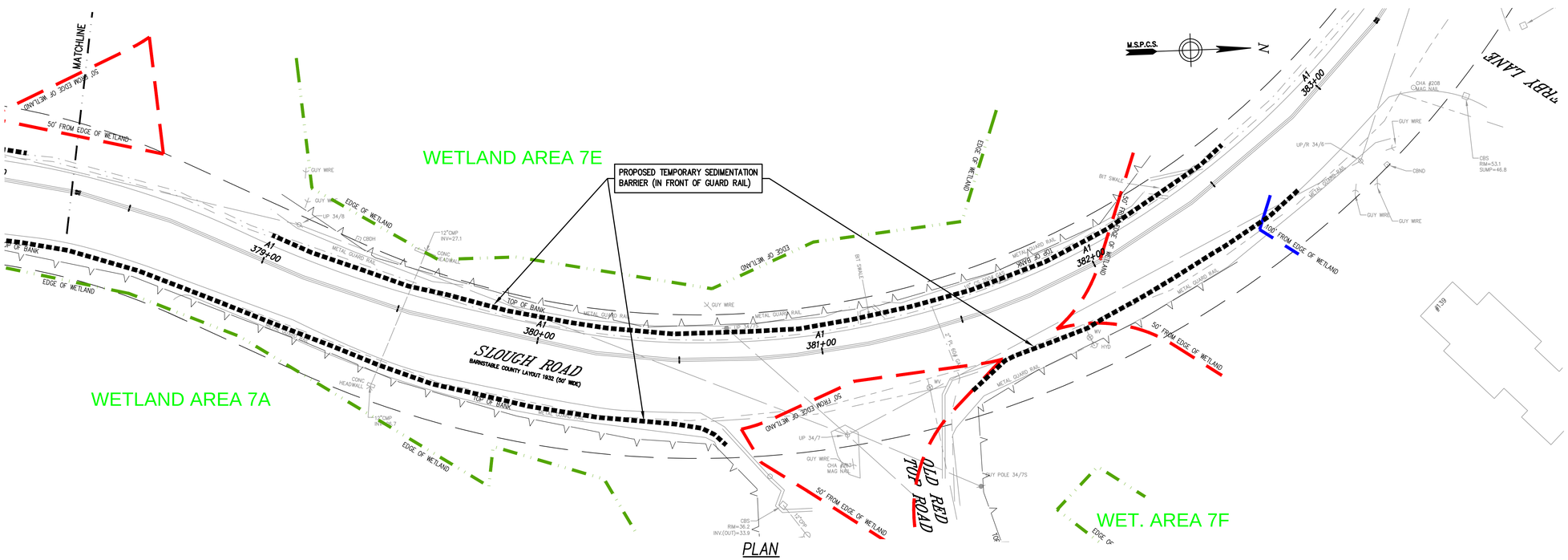

PLAN

20 10 0 20 60

1 inch = 20 ft.

SEEE CHA SHEET 173

PLAN REFERENCES:

NATIONAL GRID GAS MID CAPE MAIN REPLACEMENT CONSTRUCTION DRAWINGS BY CHA, DATED 4-1-16

DATUM NOTE:

ELEVATIONS SHOWN HEREON ARE BASED ON THE NORTH AMERICAN VERTICAL DATUM 1988 (NAVD 1988)

COASTAL engineering co.
260 Cranberry Hwy, Orleans, MA 02653
508.255.6511 P 508.255.6700 F

NO.	DATE	REVISION	BY

SEAL

DRAFT

PROJECT: NATIONAL GRID — BREWSTER, MA
SLOUGH ROAD (STA. 375+50 - STA. 382+25)

SHEET TITLE: ENVIROMENTAL EROSION CONTROL PLAN

SCALE	AS NOTED
DRAWING FILE	EEC-172.dwg
DATE	4-15-16
DRAWN BY	MAP
CHECKED BY	

EEC-173

6 OF 10 SHEETS

PROJECT NO. C18274.00

Coastal Engineering Co., Inc. © 2016

F:\SDSK\PROJ\C18000\C18274\C18274-00\XREFS\29847 - Cape Cod - MID CAPE\EEC-173.dwg Apr 15, 2016 - 3:14pm

SEEE CHA SHEET 188

TOWN OF BREWSTER
BARNSTABLE COUNTY, MASSACHUSETTS

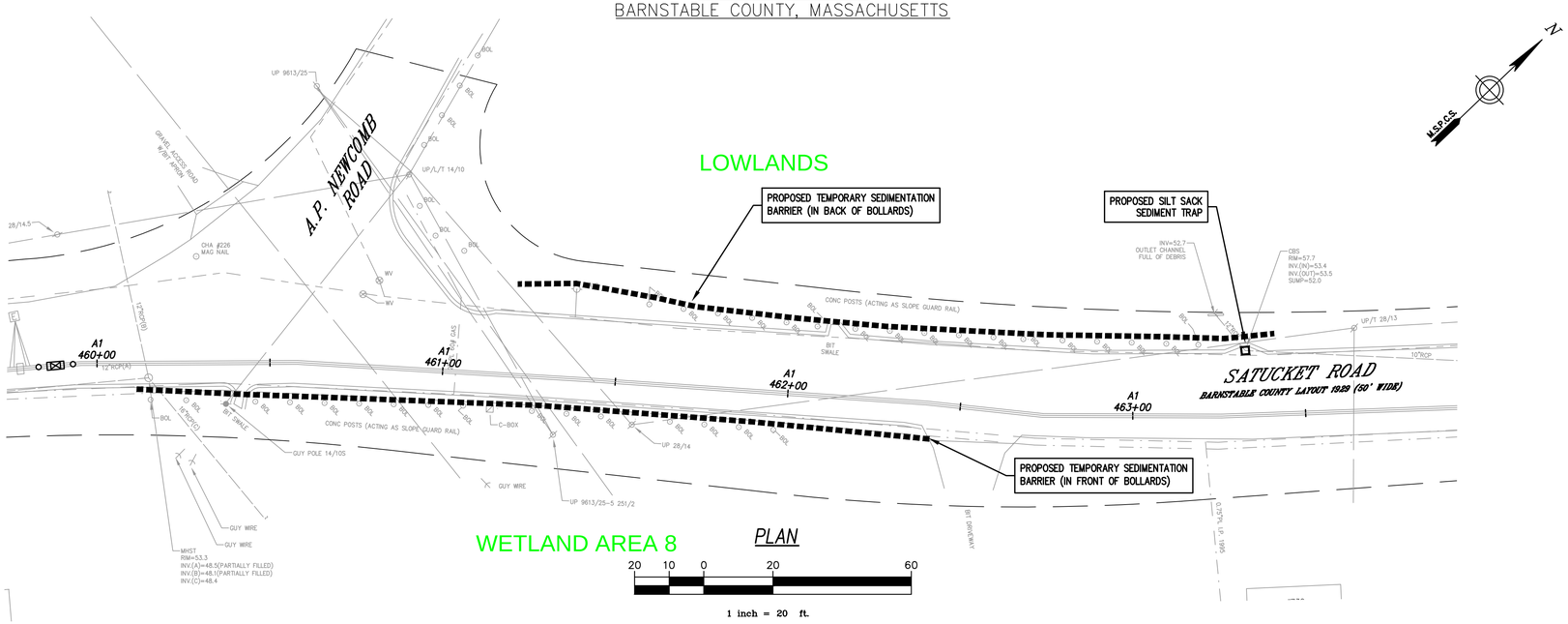

PLAN

20 10 0 20 60

1 inch = 20 ft.

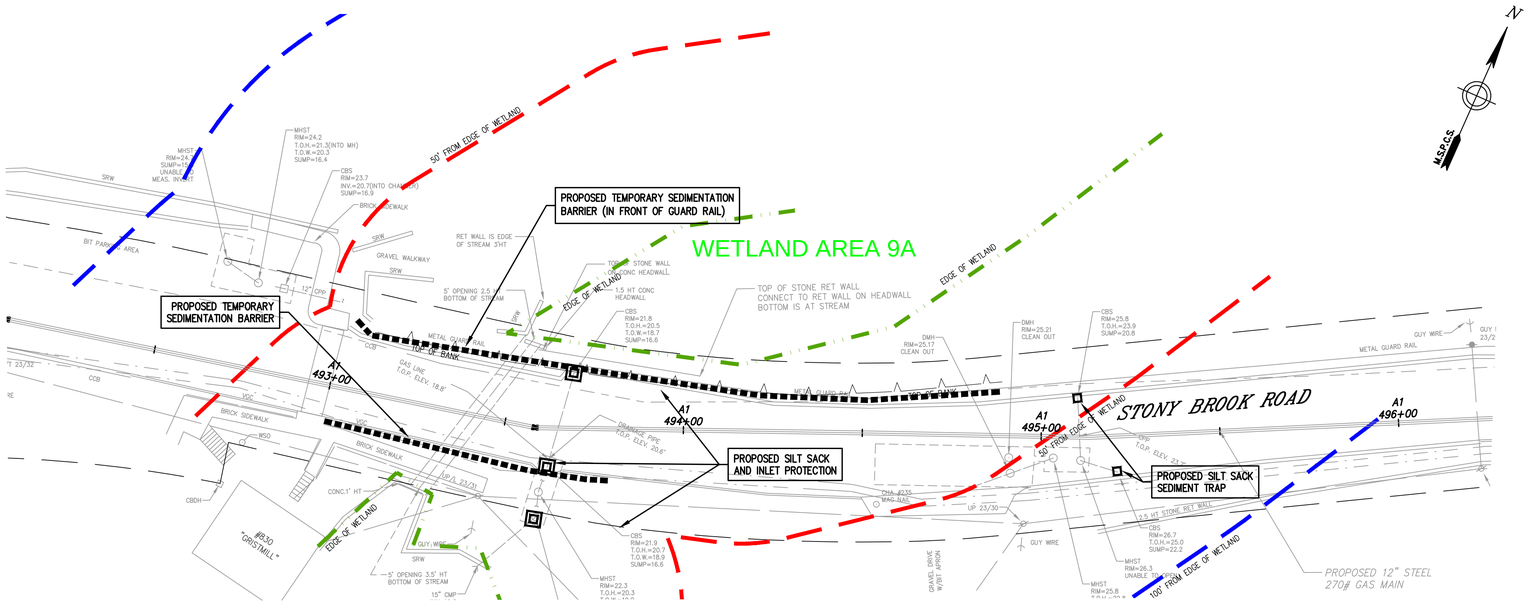

PLAN

20 10 0 20 60

1 inch = 20 ft.

SEEE CHA SHEET 194

PLAN REFERENCES:

NATIONAL GRID GAS MID CAPE MAIN REPLACEMENT CONSTRUCTION DRAWINGS BY CHA, DATED 4-1-16

DATUM NOTE:

ELEVATIONS SHOWN HEREON ARE BASED ON THE NORTH AMERICAN VERTICAL DATUM 1988 (NAVD 1988)

COASTAL engineering co.
260 Cranberry Hwy, Orleans, MA 02653
508.255.6511 P 508.255.6700 F

NO.	DATE	REVISION	BY

SEAL

DRAFT

PROJECT
NATIONAL GRID
SATUCKET ROAD (STA. 461+10 - STA. 463+50) & STONY BROOK ROAD (STA. 493+00 - STA. 494+75) BREWSTER, MA

SHEET TITLE
ENVIROMENTAL EROSION CONTROL PLAN

SCALE	AS NOTED
DRAWING FILE	EEC-194.dwg
DATE	4-15-16
DRAWN BY	MAP
CHECKED BY	

EEC-194

7 OF 10 SHEETS

PROJECT NO. C18274.00

Coastal Engineering Co., Inc. © 2016

F:\SDSKPROJ\C18000\C18274\C18274-00\XREFS\29847 - Cape Cod - MID CAPE\EEC-194.dwg Apr 15, 2016 - 2:36pm

TOWN OF BREWSTER
BARNSTABLE COUNTY, MASSACHUSETTS

SEEE CHA SHEET 197

PLAN REFERENCES:

NATIONAL GRID GAS MID CAPE MAIN REPLACEMENT CONSTRUCTION DRAWINGS BY CHA, DATED 4-1-16

DATUM NOTE:

ELEVATIONS SHOWN HEREON ARE BASED ON THE NORTH AMERICAN VERTICAL DATUM 1988 (NAVD 1988)

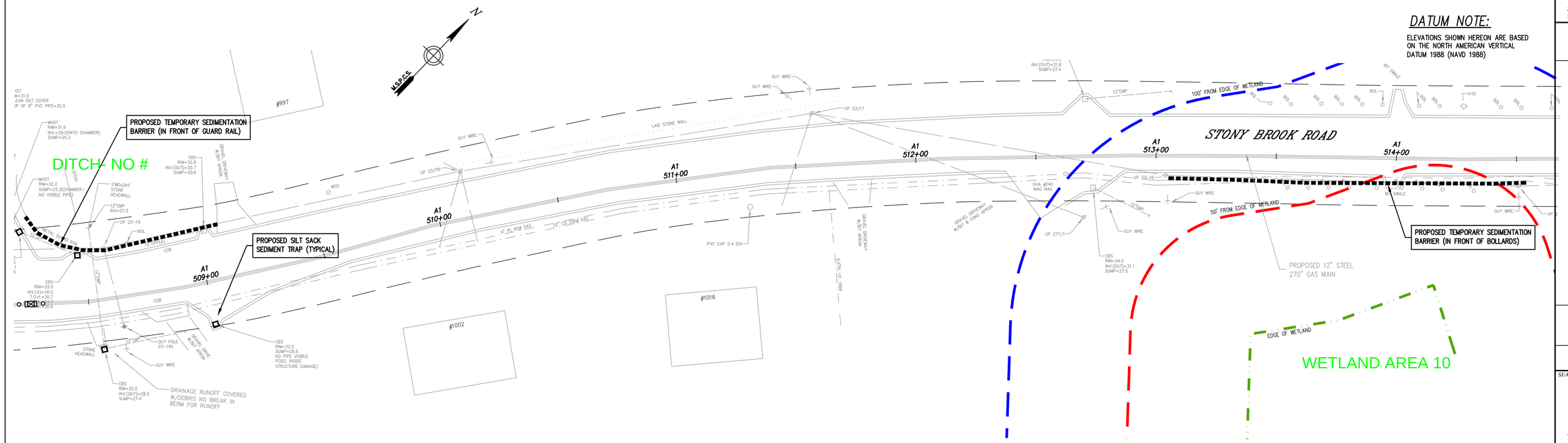

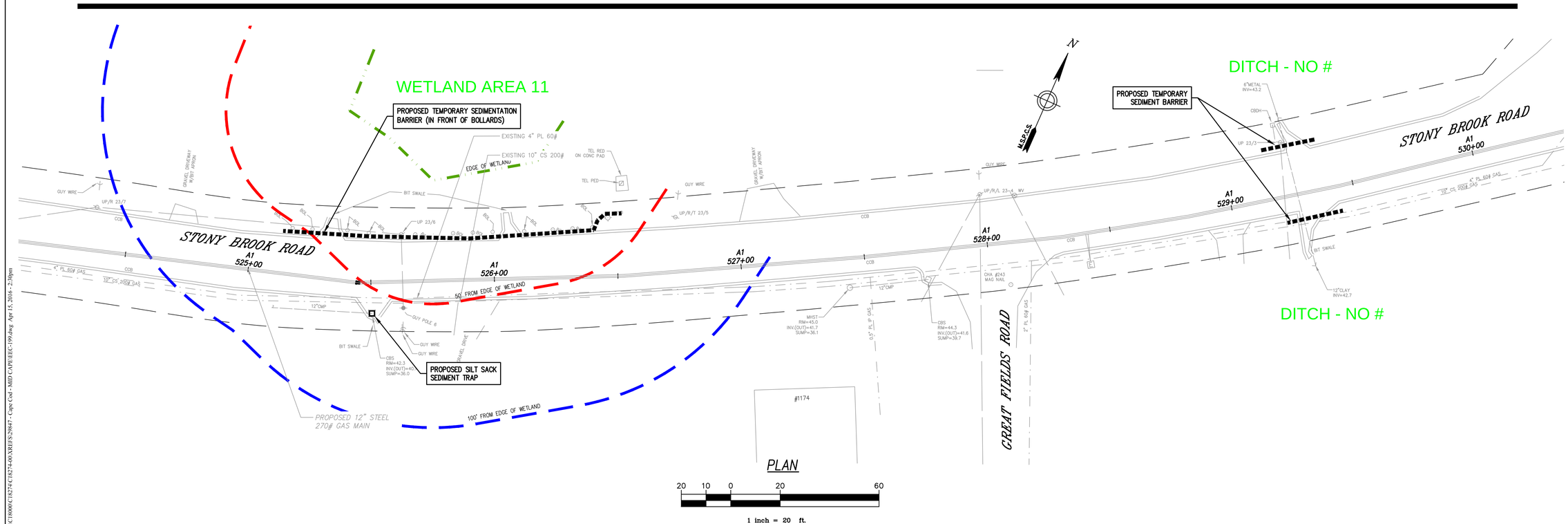

PLAN

20 10 0 20 60

1 inch = 20 ft.

SEEE CHA SHEET 199

COASTAL engineering co.
260 Cranberry Hwy, Orleans, MA 02653
508.255.6511 P 508.255.6700 F

NO.	DATE	REVISION	BY

SEAL

DRAFT

PROJECT
NATIONAL GRID
STONY BROOK ROAD (STA. 508+25 -STA. 514+50; STA. 525+30 - STA.529+40) BREWSTER, MA

SHEET TITLE
ENVIROMENTAL EROSION CONTROL PLAN

SCALE	AS NOTED
DRAWING FILE	EEC-199.dwg
DATE	4-15-16
DRAWN BY	MAP
CHECKED BY	

EEC-199

8 OF 10 SHEETS

PROJECT NO. C18274.00

Coastal Engineering Co., Inc. © 2016

F:\SDSKPROJ\C18000\C18274\C18274-00\XREFS\28847 - Cape Cod - MID CAPE\EEC-199.dwg Apr 15, 2016 - 2:30pm

TOWN OF HARWICH
BARNSTABLE COUNTY, MASSACHUSETTS

PLAN REFERENCES:

NATIONAL GRID GAS MID CAPE MAIN REPLACEMENT CONSTRUCTION DRAWINGS BY CHA, DATED 4-1-16

DATUM NOTE:

ELEVATIONS SHOWN HEREON ARE BASED ON THE NORTH AMERICAN VERTICAL DATUM 1988 (NAVD 1988)

POSS. BUFFER

NOT SHOWN

1500' >>>

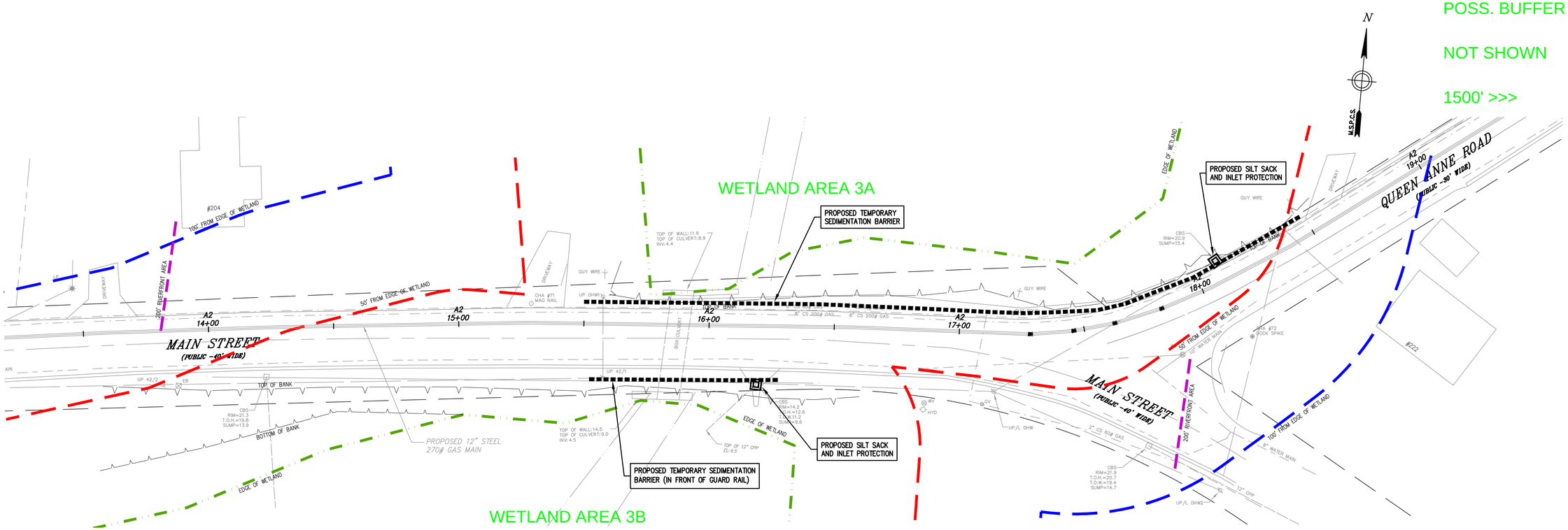

PLAN

20 10 0 20 60

1 inch = 20 ft.

SEEE CHA SHEET 203

COASTAL engineering co.
260 Cranberry Hwy, Orleans, MA 02653
508.255.6511 P 508.255.6700 F

NO.	DATE	REVISION	BY

SEAL

DRAFT

PROJECT
NATIONAL GRID
MAIN STREET TO QUEEN ANN ROAD (STA. 15+50 - 18+50)
HARWICH, MA

SHEET TITLE
ENVIROMENTAL EROSION CONTROL PLAN

SCALE	AS NOTED
DRAWING FILE	EEC-203.dwg
DATE	4-15-16
DRAWN BY	MAP
CHECKED BY	

EEC-203

9 OF 10 SHEETS

PROJECT NO. C18274.00

Coastal Engineering Co., Inc. © 2016

F:\SDSKPROJ\C18000\C18274\C18274-00\XREFS\28847 - Cape Cod - MID CAPE\EEC-203.dwg Apr 15, 2016 - 3:28pm

TOWN OF HARWICH
BARNSTABLE COUNTY, MASSACHUSETTS

SEEE CHA SHEET 231

PLAN REFERENCES:

NATIONAL GRID GAS MID CAPE MAIN REPLACEMENT CONSTRUCTION DRAWINGS BY CHA, DATED 4-1-16

DATUM NOTE:

ELEVATIONS SHOWN HEREON ARE BASED ON THE NORTH AMERICAN VERTICAL DATUM 1988 (NAVD 1988)

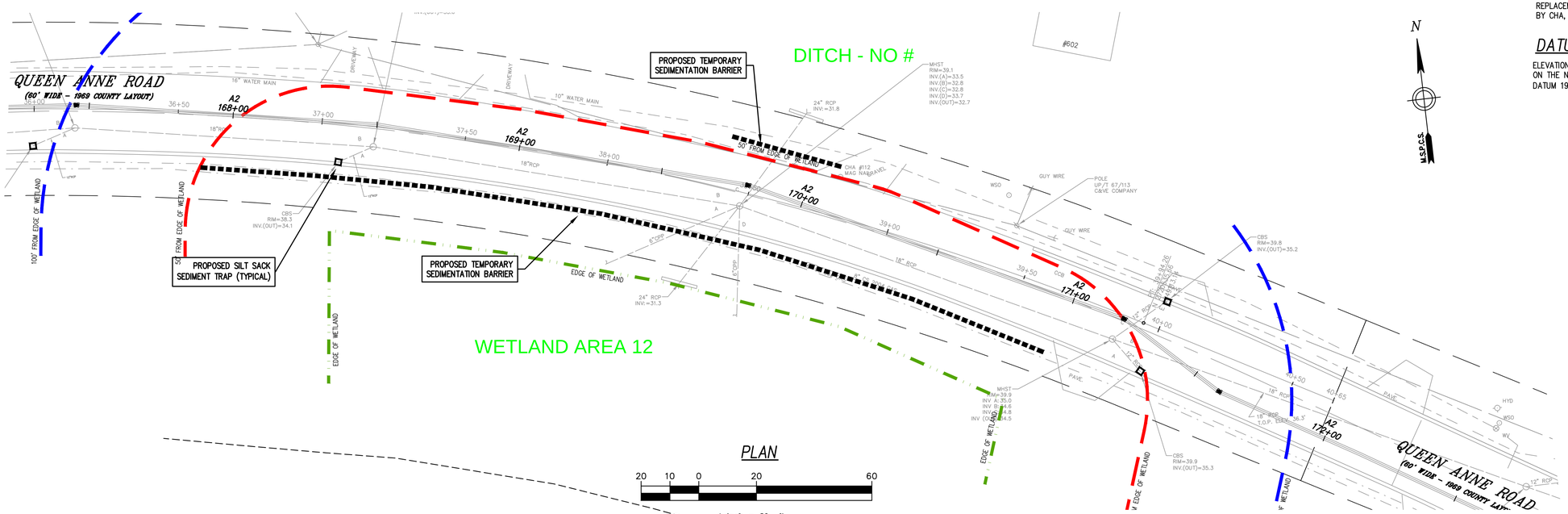

PLAN

20 10 0 20 60

1 inch = 20 ft.

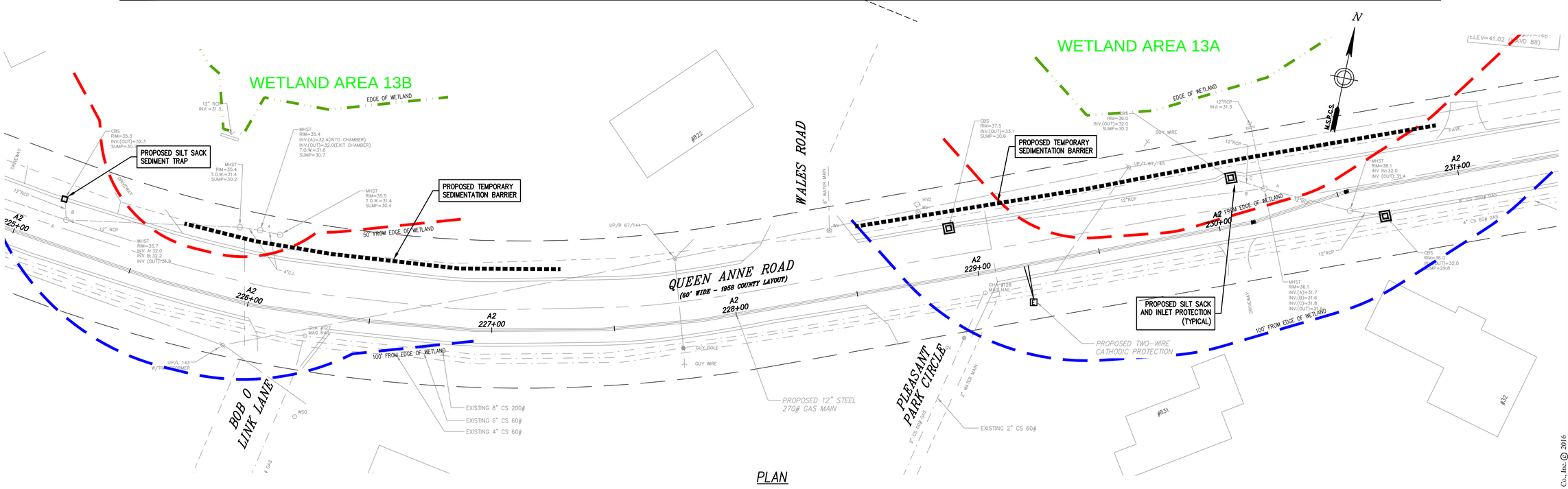

PLAN

20 10 0 20 60

1 inch = 20 ft.

SEEE CHA SHEET 243

COASTAL engineering co.
260 Cranberry Hwy, Orleans, MA 02653
508.255.6511 P 508.255.6700 F

NO.	DATE	REVISION	BY

SEAL

DRAFT

PROJECT
NATIONAL GRID
QUEEN ANNE ROAD (STA. 168+00 - STA. 172+00; STA. 225+00 - STA. 231+00)
HARWICH, MA

SHEET TITLE
ENVIROMENTAL EROSION CONTROL PLAN

SCALE	AS NOTED
DRAWING FILE	EEC-243.dwg
DATE	4-15-16
DRAWN BY	MAP
CHECKED BY	

EEC-243

10 OF 10 SHEETS

PROJECT NO. C18274.00

Coastal Engineering Co., Inc. © 2016

F:\SDSKPROJ\C18000\C18274\C18274-00\XREFS\28847 - Cape Cod - MID CAPE\EEC-243.dwg Apr 15, 2016 - 4:15pm

Appendix C

Stormwater Pollution Prevention Plan (to be completed)

Appendix D

Natural Resource Protection

FOREWORD

National Grid is committed to conducting business in a manner that preserves the quality of the environment by continuously seeking ways to minimize the environmental impact of past, present and future operations. We believe that aggressively addressing environmental issues is good business and in the best interest of the communities we serve, our employees, our shareholders, and all our other stakeholders.

National Grid's service territory encompasses five states and an abundant and rich diversity of natural resources. National Grid's transmission and distribution rights-of-way, in particular, cross or come near to many protected natural resources. This Environmental Procedure (EP) No. 3, Natural Resource Protection, ensures that we plan and conduct our work in a manner that protects natural resources and maintains associated environmental regulatory compliance.

Questions or inquiries regarding information provided in this EP should be referred to your respective Environmental Director.

Approved for use per EP 10, Document Control

Record of Change

Date of Review/Revision:

Revision	Date	Description
0	09/07/06	Initial issue
1	07/01/08	1st update
2	10/29/10	Inserted O&M activities table in Section 4.2.2.
3	10/01/12	Section 8.2.5.2 (pages 181 and 182) revised to address the new HCP, ITPs and IA for the Karner blue butterfly and Frosted Elfin butterfly.
Admin	11/6/14	Administrative change without revision number update.
4	11/19/15	Minor stormwater and New York downstate edits. Adds state-specific requirements in Section 9.
5		
6		

This document includes the following sections addressing key natural resource protection and environmental compliance concerns.

1. PURPOSE 6
2. APPLICABILITY AND SCOPE 6
3. RESPONSIBILITIES 6
4. PROJECT PLANNING AND PERMITTING 7
4.1 SCOPE AND RESPONSIBILITIES 7
4.2 PROJECTS NOT REQUIRING PERMITS 7
4.2.1 EXEMPT ACTIVITIES – GENERAL 7
4.2.2 TRANSMISSION LINE O&M ACTIVITIES 8
4.3 COORDINATION WITH DEVELOPERS AND CUSTOMERS 10
4.4 MANAGEMENT OF PERMITS AND LICENSES 10
4.4.1 APPLICATION FOR A PERMIT/LICENSE OR OTHER REGULATORY APPROVAL 10
4.4.2 PERMIT MAINTENANCE 11
4.4.3 PROJECT COMPLIANCE 11
4.4.4 PERMIT CLOSEOUT 11
5. PROTECTED WATERS 12
5.1 MASSACHUSETTS WETLANDS AND WATER PROTECTION 12
5.1.1 MASSACHUSETTS WETLANDS PROTECTION ACT AND REGULATIONS 12
5.1.2 MASSACHUSETTS WETLANDS PROTECTION ACT FILING - NOTICE OF INTENT 28
5.1.3 SECTION 401 WATER QUALITY CERTIFICATION IN MA 33
5.1.4 MA WATERWAYS REGULATION PROGRAM (CHAPTER 91) 40
5.1.5 MA COASTAL ZONE MANAGEMENT 47
5.1.6 MA WATERSHED PROTECTION ACT 54
5.1.7 MA STORM WATER MANAGEMENT 57
5.1.8 MA CONSTRUCTION DEWATERING 60
5.2 RHODE ISLAND WETLANDS AND WATER PROTECTION 66
5.2.1 RI FRESHWATER WETLANDS REGULATIONS 66
5.2.2 RI COASTAL RESOURCES MANAGEMENT COUNCIL REGULATION 73
5.2.3 SECTION 401 WATER QUALITY CERTIFICATION IN RHODE ISLAND 78
5.2.4 RIDEM STORM WATER MANAGEMENT 81
5.2.5 RI DRINKING WATER PROTECTION 82
5.2.6 RI CONSTRUCTION DEWATERING 85
5.3 NEW HAMPSHIRE WETLANDS AND WATER PROTECTION 88
5.3.1 TYPICAL ACTIVITIES REGULATED AT NATIONAL GRID FACILITIES 89
5.3.2 GENERAL APPROACH TO PERMIT AUTHORIZATION FOR NATIONAL GRID FACILITIES 90
5.3.3 GENERAL NATIONAL GRID COMPLIANCE PROCEDURE FOR ACTIVITIES IN NH WETLANDS 93

5.3.4 UNIQUE PROVISIONS IN THE WETLANDS RULES FOR UTILITY PROJECT WORK IN NH 94
5.3.5 PROCEDURE FOR NATIONAL GRID MAINTENANCE ACTIVITIES IN NH 95
5.3.6 HAZARDOUS WASTE CLEANUP PROJECTS WHICH INVOLVE WETLANDS OR WATERS 96
5.3.7 GENERAL WETLANDS BUREAU REGULATORY PROCESS 96
5.3.8 TIME FRAMES AND SCHEDULES 97
5.3.9 SECTION 401 WATER QUALITY CERTIFICATION IN NH 97
5.3.10 APPLICATION PROCEDURES IN NH 98
5.3.11 NEW HAMPSHIRE COMPREHENSIVE SHORELAND PROTECTION ACT 100
5.3.12 STORM WATER MANAGEMENT IN NH 102
5.3.13 NH CONSTRUCTION DEWATERING 103
5.4 VERMONT WETLANDS AND WATER PROTECTION 109
5.4.1 VT WETLANDS PROTECTION AND REGULATIONS 109
5.4.2 STORM WATER DISCHARGE FROM CONSTRUCTION SITES IN VT 117
5.4.3 VT CONSTRUCTION DEWATERING 120
5.5 NEW YORK WETLANDS AND WATERS PROTECTION 124
5.5.1 FRESHWATER WETLANDS AND PROTECTED WATERS 124
5.6 FEDERAL WETLANDS AND WATER PROTECTION 132
5.6.1 U.S. ARMY CORPS OF ENGINEERS 132
5.6.2 NPDES STORM WATER PROGRAM 150
5.6.3 NPDES CONSTRUCTION DEWATERING 154
5.7 GENERAL APPROACH TO PERMIT AUTHORIZATION FOR NATIONAL 155
5.7.1 MASSACHUSETTS 155
5.7.2 NEW HAMPSHIRE 155
5.7.3 VERMONT 155
5.7.4 RHODE ISLAND 156
6. ROW ACCESS, MAINTENANCE AND CONSTRUCTION BEST MANAGEMENT PRACTICES 157
6.1 RIGHT-OF-WAY (ROW) ACCESS 157
6.2 CONSTRUCTION ALONG ROWs 159
6.3 STRUCTURES IN WETLANDS 160
6.4 CLEAN-UP AND RESTORATION STANDARDS 161
6.5 GATES ON RIGHTS-OF-WAY 163
6.6 FIELD REFUELING AND MAINTENANCE OPERATIONS 163
6.7 CONSTRUCTION BEST PRACTICES 164
6.8 NOTIFICATION 165
6.9 TYPICAL BEST MANAGEMENT PRACTICE (BMP) DRAWINGS 166
7. MIGRATORY BIRDS 168
7.1 SCOPE AND RESPONSIBILITIES 168
7.2 REGULATORY AGENCY CONTACTS 169
8. RARE & ENDANGERED SPECIES 170
8.1 SCOPE AND RESPONSIBILITIES 170
8.2 STATE-SPECIFIC REGULATORY INFORMATION 170

8.2.1 MASSACHUSETTS 171
8.2.1.1 THE MASSACHUSETTS NATURAL HERITAGE AND ENDANGERED SPECIES PROGRAM 171
8.2.1.2 HABITAT MAPS FOR PROTECTED SPECIES 171
8.2.1.3 FILING REQUIREMENTS 171
8.2.1.4 MAINTENANCE EXEMPTIONS 172
8.2.2 RHODE ISLAND 173
8.2.2.1 THE RHODE ISLAND NATURAL HERITAGE PROGRAM 173
8.2.2.2 RI FRESHWATER WETLANDS REGULATIONS 174
8.2.3 NEW HAMPSHIRE 174
8.2.3.1 NEW HAMPSHIRE PROGRAMS 174
8.2.3.2 NOTIFICATIONS 175
8.2.4 VERMONT 175
8.2.4.1 RARE, THREATENED AND ENDANGERED SPECIES PROTECTION 175
8.2.4.2 PERMITS AND VARIANCES 175
8.2.4.3 CONTACTS 176
8.2.5 NEW YORK 176
8.2.5.1 AGENCY CONTACTS/INFORMATION 176
8.2.5.2 KARNER BLUE BUTTERFLY AND FROSTED ELFIN 177
8.2.5.3 OTHER SPECIES 178
9. CULTURAL, HISTORIC AND OTHER NATURAL RESOURCES 178
9.1 SCOPE AND RESPONSIBILITIES 178
9.2 STATE-SPECIFIC REGULATORY INFORMATION 179
9.2.1 MASSACHUSETTS 179
9.2.1.1 MA HISTORICAL COMMISSION 179
9.2.1.2 PROCEDURES 179
9.2.2 RHODE ISLAND 180
9.2.2.1 THE RHODE ISLAND HISTORICAL PRESERVATION AND HERITAGE COMMISSION 180
9.2.2.2 PROCEDURE 180
9.2.3 NEW HAMPSHIRE 181
9.2.4 VERMONT 182
9.2.5.1 PARKS, RECREATIONAL SITES AND HISTORIC RESOURCES 183
9.2.5.2 ADIRONDACK PARK 183
9.2.5.3 COASTAL ZONE MANAGEMENT AREAS 186
9.2.5.4 STATE FOREST PRESERVES, STATE FORESTS, UNIQUE AREAS AND MULTIPLE-USE AREAS 186
9.2.5.5 FEDERAL REFUGES 187
9.2.5.6 AGRICULTURAL AREAS 188
10. HERBICIDE & PESTICIDE USE 188
10.1 SCOPE AND RESPONSIBILITIES 188
10.2 PROTECTION OF NATURAL RESOURCES 190
10.3 GENERAL REGULATORY REQUIREMENTS FOR PESTICIDE USE 190
11. UNAUTHORIZED DUMPING 191

11.1 SCOPE AND RESPONSIBILITIES 191

1. PURPOSE

The purpose of this Environmental Procedure (EP) is to ensure that National Grid personnel plan and conduct work activities in a manner that protects natural resources and maintains associated environmental regulatory compliance.

2. APPLICABILITY AND SCOPE

This EP applies to National Grid Environmental Engineers, including environmental consultants, who provide support services to National Grid employees and contractors planning and performing work that may involve environmental permitting requirements, protected waters, right-of-way access, maintenance, and construction, migratory birds, rare and endangered species, cultural, historic and other natural resources, herbicide and pesticide use, and unauthorized dumping. National Grid employees and contractors who plan or perform such work are to follow the state-specific Natural Resource Protection Environmental Guidance (EGs) that are referenced in this EP.

3. RESPONSIBILITIES

National Grid Environmental Engineers, including assigned environmental consultants, are responsible for providing support services to National Grid employees and contractors, to ensure that work planning and performance protects natural resources and maintains environmental regulatory compliance. National Grid employees and contractors are responsible for planning and performing their work in a manner that protects natural resources and maintains compliance with applicable regulatory requirements.

4. PROJECT PLANNING AND PERMITTING

4.1 SCOPE AND RESPONSIBILITIES

Some of the most important environmental aspects of planning projects involve identifying any protected natural resources, determining the applicable environmental permitting requirements, and applying work site practices needed to avoid or minimize environmental impacts. The Environmental Engineer is responsible for providing such project planning assistance to the Project Engineer and for determining how natural resource protection and environmental compliance will be maintained throughout projects. Please note that the generic title of Project Engineer is used throughout this EP and applies to any National Grid employee or consultant personnel who plans, designs, manages, supervises or coordinates work activities.

The Environmental Engineer may be a member of the Environmental Department or an outside environmental consultant. The Environmental Engineer's responsibilities include:

- Identifying protected natural resources and regulatory jurisdiction and requirements;
- Assisting in the evaluation of environmental issues to be considered when preparing the project scope;
- Assisting the Project Engineer in obtaining the necessary environmental regulatory approvals;
- Contacting the public and environmental agencies, when necessary;
- Monitoring environmental regulatory compliance; and,
- Providing direction on work site practices to minimize environmental impacts and, when necessary, choosing an environmental consultant to assist with these responsibilities.

During the project screening process, it is important that the Environmental Engineer and/or an environmental consultant assist Project Engineers in the use of an environmental checklist associated with an EDP, EG or other applicable procedure or guidance. The checklist is useful for considering the potential presence of protected natural resources. The Environmental Engineer and/or environmental consultant shall assist with the identification of protected natural resources by checking available regulatory agency information, such as GIS databases and mapping sources.

4.2 PROJECTS NOT REQUIRING PERMITS

4.2.1 EXEMPT ACTIVITIES – GENERAL

Projects in the vicinity of regulated areas may not require permits if the work is being performed as maintenance or is considered to be insignificant. In all cases, the use of protective measures or work practices would be appropriate to ensure protection of the

environment. The decision to conduct monitoring of the protective measures may be made by the Environmental Engineer, project engineer or field construction crew and will be based upon professional judgment and experience.

4.2.2 TRANSMISSION LINE O&M ACTIVITIES

The table below summarizes the level of effort that will be utilized to screen transmission line maintenance projects for environmental permitting concerns. The table also presents BMPs that should be used for each type of O&M activity. Key to evaluating each type of maintenance activity is the completion of the EG-301 checklist by the department engaged in the activity.

Transmission Line Operation and Maintenance Activities and Level of Environmental Permitting Review

O&M Activity	Typical Work Scope	Group Typically Performing Work	Environmental Review – Level of Effort	Notifications/Permitting	BMPs to be Implemented		
					EG-303 / Priority Habitat BMPs[1]	Wetlands Inspections	Turtle Training (if in habitat)
Ground-Based Visual Patrol	ATV Patrol – 1 Man	Contractor or TLS	Generally, no review, unless EG-301 checklist results warrant	Generally, no notifications to Conservation Commissions or agencies (as long as no crossing of regulated wetlands or waters are made with an ATV or other equipment; otherwise, permits may be applicable)	X		
Wood Pole Inspection and Treatment	Walking ROW or ATV ROW. Crew hand digs around each individual pole	Contractor	Desktop review, dependant upon EG-301 checklist results	Generally, no notifications to Conservation Commissions or agencies (Foot access and hand digging are exempt under WPA (10.02(2)(b)(1)(g))[2]. Permits may be applicable if regulated wetlands or waters are to be crossed with ATV or other equipment	X		X
Steel Tower Footing Inspection and Repair	Walking ROW / ATV / Pickup Truck, possibly a mini-excavator using plastic 4x8 mats, dig at each tower leg	Contractor or TLS	Desktop review, dependant upon EG-301 checklist results	Notification or permitting, as applicable	X	X	X
Steel Tower Painting	Walking ROW / ATV / Pickup Truck	Contractor	Desktop review, dependant upon EG-301 checklist results	Courtesy notifications or permitting, as applicable	X		X
Perform Shieldwire Dead-end Replacements	Most likely live line work, wood mats, bucket trucks, pickup trucks, support vehicles/ may be climbed	TLS	Full evaluation, dependant upon EG-301 checklist results	Notification or permitting, as applicable	X	X	X

NOTES:

1. For New Hampshire and Vermont, see State-specific BMP manuals.
2. In Massachusetts.

4.3 COORDINATION WITH DEVELOPERS AND CUSTOMERS

For all developers or customers projects, permits are the responsibility of the developer or customer and shall be handled as follows:

- Wetland Resource Protection Permit
  - If National Grid will own the equipment following installation and the equipment will be installed in regulated areas, National Grid shall ensure that the developer or customer has obtained the appropriate permits and that the utilities are included in their filings, or
  - If National Grid's work (ground disturbance) is within regulated areas, National Grid shall ensure that the developer or customer has obtained the appropriate permits and that the utilities are included in their filings.

- Construction Stormwater Permit
  - National Grid will ensure that the developer has obtained all applicable Construction Stormwater Permits. A copy of the NYSDEC Acknowledgement letter should be requested by National Grid.
  - National Grid, or its contractors, must sign onto the developer's valid SWPPP.

4.4 MANAGEMENT OF PERMITS AND LICENSES

There are several statutes and regulations that could be applicable to a given project. The requirements of these statutes and regulations may include observing certain performance standards and filing permit applications to ensure regulatory and public review of a project that may impact protected resource areas. The permitting process may take from several weeks for a simple notification to several years depending on the location and scope of the project, the appeals process, and the schedules of the regulatory authorities.

4.4.1 APPLICATION FOR A PERMIT/LICENSE OR OTHER REGULATORY APPROVAL

When it has been determined that a permit, license or other regulatory approval is required, it is imperative that the application or equivalent regulatory submittal be completed correctly. As previously stated, the Project Engineer is responsible for obtaining the required permit, license or other regulatory approval. The Project Engineer may complete the application or utilize either an in-house environmental resource or outside environmental consultant to prepare the application. In the event that the Project Engineer elects to complete the application, an Environmental Engineer must review the application prior to submittal.

4.4.2 PERMIT MAINTENANCE

All permits/licenses and other regulatory approvals must be properly maintained to ensure compliance with applicable regulations. Copies of the permit, license or other regulatory approval should be kept in the Project Engineer's project file and also maintained by the environmental resource utilized by the project. A copy of all permits and/or approvals should be provided to the contractor performing the work and some permits are required to be at the affected work sites.

4.4.3 PROJECT COMPLIANCE

The Project Engineer is responsible to ensure that compliance with permit/license conditions is maintained throughout the project. Should the Project Engineer choose to transfer this responsibility to other project personnel, this must be documented either by a written memorandum or by naming the responsible person on the project personnel list. The responsible person should monitor the project through all phases until completion. The level of oversight necessary is dependent on the scope of the project, but may include site visits during construction and a periodic review of permit/license conditions.

On-site monitoring during construction in regulated areas, such as a wetland, should be performed by an employee or designee knowledgeable in environmental regulatory requirements, the permit conditions and proper work practices. The results of the monitoring or site visits should be documented.

A permit, license or other regulatory approval may also contain requirements for periodic reporting to the applicable regulatory agency. The National Grid personnel responsible for the permit must ensure that these required submittals are completed. Copies of the submittals must be kept in the project file.

For permits that have conditions associated with post-construction operation, these conditions will be forwarded to personnel responsible for post-construction operation and compliance as well as to the appropriate Environmental Engineer.

4.4.4 PERMIT CLOSEOUT

Upon completion of a project, the Project Engineer is responsible to ensure that areas surrounding the site are restored to the original conditions to the extent possible and if required, all final documents have been obtained.

For more information about project permitting, refer to EP-4, Administrative, and to Chapter 1 of the respective, state-specific EG for Natural Resource Protection.

5. PROTECTED WATERS

The various states within National Grid's service territory include abundant and diverse sources of ground and surface waters that are protected by various regulatory authorities. The scope of affected surface waters include portions of the Atlantic Ocean, two Great Lakes (Erie and Ontario), and thousands of rivers, streams, lakes, wetlands and other water bodies. Many of National Grid's transmission and distribution facilities cross and/or pass near to these water resources.

To protect these water resources, Environmental Engineers are responsible for providing Project Engineers and field operations with project planning and regulatory compliance support, specifically by:

- identifying if proposed work may involve protected water resources by checking available regulatory agency information, such as GIS databases and mapping sources;
- coordinating communications with Federal and/or applicable state agencies and obtaining any necessary permits or approvals; and,
- providing direction on work site selection, scheduling, and practices to avoid or minimize disturbances to such water resources.

The remainder of this chapter is subdivided jurisdictionally by the states in which National Grid operates (Massachusetts, Rhode Island, New Hampshire, Vermont, and New York) and also includes Federal jurisdiction. Details regarding the various regulatory programs/procedures covered can be accessed through hyperlinks to agency websites, permit application kits, various fact sheets and other permitting and compliance aids that have been included with this chapter. For additional information on project permitting, please refer to EP-4, Administrative.

5.1 MASSACHUSETTS WETLANDS AND WATER PROTECTION

5.1.1 MASSACHUSETTS WETLANDS PROTECTION ACT AND REGULATIONS

The Massachusetts Wetlands Protection Act (WPA) regulates coastal and inland wetlands and waters, and for some of these resources areas, an adjacent 100-foot buffer zone. Inland and coastal resources are regulated by specific definition, with work performance standards enumerated in the regulations. The Act (M.G.L. c. 131, Section 40) is administered by local conservation commissions with MA Department of Environmental Protection (DEP) Division of Wetlands and Waterways oversight. The regulations promulgated to enforce the Act are at 310 CMR 10. 00 et seq.

Information regarding the Wetlands Protection Act, regulations, publications and filing forms can be reviewed at **http://www.magnet.state.ma.us/dep/.**

The WPA and regulations recognize that wetland resources are important in serving some or all of the following eight public interests. Applicants must demonstrate that these interests are protected during construction and after a project is complete. The general interests to be protected for any project are:

- Protection of public and private water supply;
- Protection of groundwater supply;
- Flood control;
- Storm damage prevention;
- Prevention of pollution;
- Protection of land containing shellfish;
- Protection of fisheries;
- Protection of wildlife habitat.

Types and Definitions of Regulated Wetland Resources

Simply stated, wetlands are typically low areas which are inundated or saturated by surface or groundwater, or storm flows for a sufficient period of time to support a predominance of vegetation adapted to or which prefer living in wet soils.

The WPA regulates various coastal and inland wetlands as defined with the following characteristics or criteria:

Inland Wetlands are defined in the Wetlands Protection Act (WPA) as any wet meadow, marsh, swamp, or bog areas where water or ice provide a significant part of the supporting substrate for a plant community for at least five months of the year; emergent and submergent plant communities in inland waters; that portion of any bank which touches any inland waters. These resource areas must border a water body.

Coastal Wetlands are defined in the Wetlands Protection Act as any bank, marsh, swamp, meadow, flat or other lowland subject to tidal action or coastal storm flowage.

Be aware that in Massachusetts, more than just "wetlands" are protected under the Massachusetts Wetlands Protection Act. There are a number of other jurisdictional resource areas.

Several of the more common resource areas potentially affected by National Grid facilities or actions are noted below.

Inland Wetland Resource Area Definitions

Bank (310 CMR 10.54) - A bank is the portion of the land surface which normally abuts and confines a water body. Freshwater banks have a 100-foot discretionary buffer.

Bordering Vegetated Wetland (BVW) (310 CMR 10.55) - Freshwater wetlands which border on creeks, rivers, streams, ponds and lakes. The types of freshwater wetlands are wet meadows, marshes, swamps and bogs. They are areas where the topography is low and flat and where the soils are saturated for part of the year.

BVW's have a 100-foot discretionary buffer. In BVW a standard 1:1 replacement for wetlands lost (e.g., filled) is required for Orders of Conditions and Water Quality Certifications.

Land Under Water Bodies and Waterways (310 CMR 10.56) - The land beneath any creek, river, stream, pond or lake.

Bordering Land Subject to Flooding [100-Year Flood Plain, 310 CMR 10.57(l)(a)] - This is an area with low, flat topography adjacent to and inundated by flood waters rising from creeks, rivers, streams, ponds or lakes. At 10.57(2)(a)3 this resource area is estimated as the maximum lateral extent of flood water which will theoretically result from the statistical 100 yr. frequency storm. Refer to Flood Insurance Rate Map (FIRM) maps for the municipality in question. FIRM maps are available at municipal offices. Compensatory storage of flood plain lost on an incremental basis is standard language for Orders of Conditions.

Isolated Land Subject to Flooding [310 CMR 10.57(l)(b)] - This is an isolated depression or closed basin without an inlet or an outlet.

Riverfront Area (310 CMR 10.58) - This is the area of land between a river's mean high water line and a parallel line measured horizontally. It can overlap other resource areas and varies in width from 25 to 200 ft. The Rivers Protection Act amended the WPA in 1996 to include this resource area.

Coastal Wetland Resource Area Definitions

Coastal Banks (310 CMR 10.30) - The seaward face or side of any elevated land form other than a coastal dune. Coastal banks have a 100-foot discretionary zone.

Salt Marshes (310 CMR **10.32) -** A coastal wetland that extends landward up to the highest high tide line. Salt marshes have a 100-foot discretionary buffer.

Land Under the Ocean (310 CMR 10.25) - Land extending from the mean low water line to the seaward boundary of the municipality's jurisdiction and includes land under estuaries.

Buffer Zone Definition

Buffer Zone - The 100-Foot Discretionary Buffer Zone (Coastal and Inland) is an area of land extending 100 feet horizontally outward from the boundary of any bank, freshwater wetland, coastal wetland, beach, dune, flat, marsh or any swamp. Work in buffer zones is subject to review by the local conservation commission and DEP.

Typical Activities Regulated

The following list includes examples of typical project activities that may require filing a Request for Determination of Applicability (RDA), or a permit application called the Notice of Intent (NOI) when conducted in wetland resource areas or within 100 feet of select resources. These filings must be submitted to the local conservation commission with copies sent to the Department of Environmental Protection (DEP). In cases involving rare wetland species (see Massachusetts Natural Heritage Atlas), the Natural Heritage and Endangered Species Program must also be sent a copy of the NOI to arrive before or simultaneously with the Commission filing. **Note**: Vernal pools are becoming an important feature of the regulated landscape. Under the WPA a vernal pool must be associated with a jurisdictional resource area; however, local bylaws may circumvent that state requirement. Likewise differences between "certified" vernal pools and "potential" vernal pools are basically non-existent from a permitting standpoint.

The WPA defines "alter" as meaning to change the condition of any area subject to protection under the WPA. Typical, but not inclusive, activities/facilities regulated include:

- Excavations;
- Foundations, support structures;
- Drilling activities;
- Pole or pile installations; and,
- Access road improvements or construction.

Certain O&M activities are exempt from the WPA (but not necessarily exempt from local by-laws) and are discussed later.

The DEP's Bureau of Resource Protection issued Guideline No. BRPG01-01 in 2001. That guideline deals with snow disposal site selection and states that wetlands,

waterways, storm drains, and stormwater drainage swales or ditches are to be avoided in selecting disposal sites.

General Approach to Permit Application

The following general steps should be followed in determining whether a project requires authorization under the Massachusetts Wetlands Projection Act regulations.

Wetland Resource Delineation

Determine whether the project will be located in a wetland resource area (e.g., bordering vegetated wetland floodplain, riverfront area, etc). The applicant is required to have wetland resources identified on an engineering plan along with the proposed work or activity. The level of detail provided on plans depends on the size and complexity of the project.

- Projects that are located near (within 100 feet) certain wetland resources regulated under the WPA must also have wetland resources delineated in accordance with specific wetland resource definitions in the regulations.
- The latest version of the DEP's Delineation Handbook should be followed to determine jurisdictional boundaries for BVW.
- For projects requiring wetland replication, the DEP issued in a publication entitled Massachusetts Inland Wetland Replication Guidelines in March, 2002. It provides the applicants and Commissions with procedures for designing and overseeing wetland replication aspects of a project.
- Determine if there is a rare species habitat onsite (use MA Natural Heritage Atlas); if there are Federal Emergency Management Administration (FEMA) flood plains infringing on the site; and if the site is located in an Area of Critical Environmental Concerns (ACEC).

In December 2002, the DEP revised its regulations regarding perennial/intermittent status of streams. A summary of the revised regulations is provided below:

a. A stream shown as perennial on the latest USGS map is perennial;

b. If a stream is shown as intermittent or not shown on the USGS map and has a watershed of greater than 1 square mile, it is perennial;

c. If a stream is shown as intermittent or not shown on the USGS map and has a watershed of less than 1 square mile, it is intermittent unless:

i. the stream has a watershed of at least ½ square mile and has a predicted flow rate of greater than 0.01 cfs at the 99% flow duration using USGS's StreamStats application, then it is presumed to be perennial;

ii. when the USGS StreamStats application cannot be used, and the contributing watershed to the stream in question is shown to have a sand and gravel contribution of 75% or greater, then it is presumed to be perennial.

Project Description and Design

In making any regulatory jurisdictional determination, the following information must be provided:

- Engineering plans (usually 1":40' scale; or, if allowed, T-Sheets for transmission projects) indicating the general site and details on the size and location of the proposed structure, excavation or dredge site. Plans are limited in size to 24" by 36";
- A complete and concise description of all construction methods, construction equipment, and construction schedules to be used to construct or perform the proposed activity; and,
- Include numbered wetland flagging on plans.

Potential Project Impact and Review Alternatives to Minimize Impact

Projects involving fill, excavation or dredging in a wetland resource area should demonstrate that there are no practical alternatives which would minimize fill or excavation of the wetlands. For authorization to perform work in the Riverfront Area as a Limited Project not subject to Energy Facilities Siting Board transmission line review, applicants must provide both an alternatives assessment and impact analysis demonstrating the need to site a project within this specific resource area.

Type of Permit Application Required

The DEP now provides application forms for easy downloading from DEP's web page. The various WPA forms are located at **http://www.state.ma.us/dep**.

Name of Applicant

It is very important to ascertain who the actual owner of a piece of property is. Sometimes Massachusetts Electric wants a project done and while they may be the applicant in that case, the affected property itself may actually be New England Power

Company property. Many times the Applicant and Owner are the same. Check with Real Estate to determine the correct applicant for the project at hand. Without correct initial recording, the release of an encumbrance, i.e., certificate of compliance, may not get properly recorded.

Obtaining Property Information

The best place to start is with the T-Sheets (confer with Property Assets in Northboro). In general, but not always, lands cross-hatched on the T-Sheets are fee-owned lands while those shaded are easements. You will also see some franchise notations where the lines cross over a roadway.

There is a legal file number associated with each property. For example, SH-WH 59-9 refers to the Salem Harbor-Ward Hill line, parcel 59, transaction 9. The Property Legal group will pull the paper on parcel 59 in this example to get the book and page information that we would use in the NOI.

The structure may be a pole(s), a substation, or other feature which is subject for the filing. The legal file number is taken from the T-Sheets as is the property owner information. Property Legal in Waltham will then provide the book and page information. Since our projects usually involve multiple properties, this information is best placed in an attachment or appendix to the filing rather than trying to cram the information on the NOI form.

Request for a Determination of Applicability

A Request for a Determination of Applicability (RDA) may be filed when work is proposed within the Buffer Zone; for certain minor activities in regulated areas, for wetland boundary determination; or when a written determination of jurisdiction is appropriate for “maintenance and repair" projects.

Notice of Intent

The Notice of Intent (NOI) is filed with the local Conservation Commission and DEP when work is proposed that will alter a wetland resource area. The Notice of Intent application includes a description of the proposed work, the wetland resource area, and proposed activities to protect and/or mitigate wetland alteration or loss. The NOI process also involves notifying abutters to affected areas or substation property lines, and a public hearing. (Note: Abutter notification under the WPA and a local by-law may differ. The more comprehensive takes precedence.)

For linear projects in particular, notification must occur either for landowners within 100 feet of the project property line (as with any other project) but there is also an

option to notify abutters within 1,000 feet of the limits of the proposed activity that is subject to the WPA, whichever is less onerous.

The DEP assigns a file number for the application and notifies the applicant and the local Conservation Commission before a permit can be issued. In addition, the DEP makes a determination on the file number notification whether a separate 401 Water Quality Certification is required for the project. The permit to conduct work in wetlands is called an Order of Conditions. Appeal of a local conservation commission's decision can be submitted to the DEP with cause within 10 business days of the issuance of the Order. Appeal may be made by the applicant, the DEP, an abutter, or any 10 citizens of the city or town where the project is located.

Prepare and File Required Application

The party making the filing and the Project Manager should have complete copies of the filing as well as documentation of notifications.

Recordings of Order of Condition and Certificate of Compliance

Prior to accepting and recording an Order of Conditions at the Registry of Deeds or Land Court, the order should be reviewed to make certain there are no conditions which unreasonably hinder construction or future operation and maintenance of the proposed project.

An Order of Conditions must be recorded at the Registry of Deeds or Land Court against all the affected properties identified in the Notice of Intent. The Registry or Land Court should be asked to stamp the recording receipt which is provided as part of the Order. The stamped recording receipt must be returned to the Commission prior to initiating work. Likewise, when the work is completed and a Certificate of Compliance is granted by the Conservation Commission after application by National Grid, (see DEP Form 8 under Wetlands on their web page) that Certificate must also be recorded.

Forms used internally (not for the Registry, Land Court, or Commission) to document the Order and Certificate recording processes should be obtained from the end of Section 5.1.2 of this document, or in EG-302.1MA.

Provisions in the WPA Regulations Unique to Utility Project Work

Limited Projects

The WPA regulations contain provisions for certain work performed by utilities as described in 310 CMR 10.24(7)(a) and (b) and 10.53 which are

permitted at the discretion of the local Conservation Commission in wetland resources ordinarily not permitted with respect to regulatory thresholds, provided certain mitigating procedures and protection are implemented to protect the interests of the Act. This work is referred to in the regulations as "Limited Projects" because they are limited to certain activities and certain review conditions. These projects are not considered maintenance, repair or replacement activities and, therefore, require a Notice of Intent like other projects affecting wetland resources. These projects may require an individual state Water Quality Certification.

Examples of work performed by an electric utility that are identified in the utility provisions as limited projects include:

- Placement of pipeline and conduit;
- The construction or reconstruction (with a substantial enlargement) of underground or overhead transmission facilities;
- The cleanup of hazardous waste under the Massachusetts Contingency Plan;

The performance standards associated with Limited Projects are as follows:

- The issuing authority may require a reasonable alternative route with fewer adverse effects for a local distribution or transmission line not reviewed by the Energy Facilities Siting Board;

- Best available measures shall be used to minimize adverse effects during construction;
- The disturbed surface vegetation and contours of the affected area shall be substantially restored.

The issuing authority (the Conservation Commission) also has the discretion to impose additional specific work conditions and mitigation to protect the public interests as provided by the Act. They also have the discretion to waive the Riverfront Area performance standards.

Hazardous Waste Cleanup Projects Which Involve Wetlands

Revisions to the Massachusetts WPA "Limited Projects" provisions in the regulations allow cleanup projects that meet Massachusetts Contingency Plan (MCP) (310 CMR 40.00) requirements to proceed without having to obtain a variance when large amounts of fill or excavation are involved. These revisions are intended to stream-line the implementation of the recently revised

MCP cleanup program for hazardous waste sites. Cleanup projects in wetlands require filing a Notice of Intent (NOI) application with the local Conservation Commission. Emergency spills or release cleanups in wetlands require notification within 24 hours of the incident to the Conservation Commission and a follow-up NOI application as soon as possible. Standards at 310 CMR 10.53(q) for review of this Limited Project provision for cleanup projects include:

- No practical alternatives to the response action being proposed that are consistent with the requirements under 310 CMR 40. 000;
- Minimal hydrological changes to resource areas;
- Best management practices implemented to minimize impacts to wetland resources;
- Compensatory storage provided when a flood plain is affected;
- No access roads, monitoring devices, or other structures or activity installed which may restrict flows so as to cause an increase in flood stage or velocity;
- Temporary structures in wetlands removed within 30 days of completion of work and restoration of the wetlands to pre-existing conditions; and,
- Work in resource areas only when the ground is sufficiently frozen, dry or otherwise stable to support the equipment to be used.

Maintenance and Repair Activities

There is a maintenance provision for utilities in the Wetlands Protection Act statutory language (M.G.L. 131 Section 40) which simply states that "utilities" may repair, replace, and maintain, but not substantially change or enlarge, existing and lawfully located structures or facilities without a Notice of Intent. Interpretations of the "maintenance" is exercised by utilities without a formal agency confirmation process. If desired, utilities can obtain written confirmation of an interpretation of these provisions relative to a project upon written request using the Request for a Determination process. Without a written confirmation from the authorizing agency, work is subject to challenge after mobilization of construction crews. Site inspections during construction activities may result in disagreements in the interpretation of the "maintenance" provision, possibly an enforcement order and costly project delays. “Replace” as it pertains to the exemption has been defined by the National Grid Permit Review Task Force to mean within 6 ft. of the existing pole location with a height increase not to exceed 10 ft.

Written notice is given to the municipality of National Grid’s intent to perform work under the WPA exemption clause. Usually a site map with text

describing briefly the best management practices to be employed is also provided.

Note: Approximately 100 towns and cities in Massachusetts have local wetlands by-laws. Many of these by-laws require notification before work is commenced under the WPA maintenance" exception. Communities under their bylaws may not provide the maintenance exemption provision, thereby requiring a formal filing under the terms of the local bylaw only not the WPA.

Contact the Environmental Compliance Group (ECG) permitting specialist regarding the use of specific utility "maintenance" provisions before sending letters of notification to the Conservation Commission and before determining application requirements for filing a Request for Determination or a Notice of Intent application.

Jurisdictional Determination and Permit Process

The following paragraphs describe the process of determining WPA regulatory jurisdiction and obtaining an authorization (Order of Conditions) to work in wetlands.

- If unsure as to whether an area is subject to the Wetlands Protection Act, a project proponent may submit a Request for Determination of Applicability (RDA) to the local Conservation Commission.
- Within 21 days after receipt of the RDA, the local Conservation Commission must hold a public meeting and issue a Determination of Applicability. Notification of a public meeting at which the determination will be made must be published in the local newspaper. A "positive" determination means a Notice of Intent (NOI) is required. No such filing will be needed if a negative determination is made. Within the 10 day appeal period, work may proceed “at risk” if a negative determination was issued.
- If a "positive" determination is made by the Conservation Commission, file a Notice of Intent or an Abbreviated Notice of Intent with them. A Notice of Intent is essentially the permit application which describes the wetland resources and how the applicant proposes to mitigate wetland impacts resulting from a project: (1) identification of the wetland resource area on a plan; (2) proof that the proposed activity is designed to meet the performance standards of the regulations; (3) presentation of detailed documents, plans and calculations that allow the Conservation Commission to determine if the project can be conditioned to protect the interests of the Wetlands Protection Act; (4) notify abutters within 100 feet of the affected

parcel or property line at the time of filing (or those required by local by-law); and, (5) calculate and submit DEP and municipality filing fees.

- The DEP regional office will assign a file number to the case when a complete NOI is received, and will forward the number to the applicant and Conservation Commission.
- Within 21 days, the Conservation Commission must hold a public hearing. At least five business days advance notice of the hearing must be given in a local newspaper.
- Within 21 days after the public hearing is closed, the Commission will issue an Order of Conditions if the Commission finds that the performance standards have been met. A denial may be issued if the Commission finds that the performance standards conditions have not been met.

- There is a 10-business-day appeal period after an Order of Conditions is issued. This provides for parties who object to the decision to appeal directly to the DEP. The applicant may not go ahead with the work until the appeal period has elapsed or a Superseding Order has been issued by the DEP (3 10 CMR Section 10.05(7)) and the final Order has been recorded at the Registry of Deeds for the county in which the land is located.
- ECG has developed a Memorandum form (example provided) that must be submitted to National Grid Property Legal for recording of the Order of Conditions, in accordance with the Wetlands Protection Act regulations.
- Assuming there are no appeals, the applicant has three years to finish the work (unless a local by-law shortens this time frame). An Order may be extended upon written request to the issuing authority 30 days prior to its expiration.
- Amendments/Extensions - Generally there are provisions to make amendments or extend the expiration date of the Order of Conditions for a project; however, it must be done in writing and the local Conservation Commission must hold a hearing on the amendment but has the discretion to forego requiring a new Notice of Intent depending on the nature of the change.
- Upon completion of a project, the applicant must obtain a Certificate of Compliance from the Conservation Commission that issued the Order and must record it in the Registry of Deeds. This process involves drafting a letter to the local Conservation Commission informing them that the project under their jurisdiction is complete, and that all project conditions have been met on the Order of Conditions. Use the Request for Certificate of Compliance at the DEP's web site.
- ECG has developed a Memorandum form (example provided) to be submitted to National Grid Property Legal for recording the Certificate of

Compliance, thereby unencumbering our property.

Appeals

An Order of Conditions or a Determination of Applicability issued by a Conservation Commission may be appealed to the DEP (310 CMR 10.05(7)). An appeal must be filed within ten business days of the Commission's action or of the date when the Commission was to have acted if it failed to do so. The DEP will then issue a superseding Order of Conditions or a superseding Determination of Applicability after a site and application review is complete.

Variances

Variances for fill in wetlands that exceed regulatory thresholds are granted only in rare and unusual circumstances. Requests for a variance from the regulations must follow the full permitting process, including denials from the local Conservation Commission and the regional office of the DEP. Variances may be granted at an adjudicatory hearing level, but are granted only under extremely unique circumstances. Variances may also require filing an Environmental Notification Form with the Executive Office of Environmental Affairs - MEPA Unit.

A variance may be granted if:

- There are no reasonable conditions or alternatives that would allow the project to proceed in compliance with the regulation(s);
- Mitigating measures are proposed that will allow the project to be conditioned so as to contribute to the protection of the interests identified in the WPA; and,
- The variance is necessary to accommodate an overriding community, regional, state, or national public interest or it is necessary to avoid an Order that so restricts the use of property as to constitute an unconstitutional taking without compensation.

Following review by the local Conservation Commission and DEP regional office, a variance request letter must be filed with the DEP Boston office. The request should include, at a minimum, thorough documentation of why or how each of the above conditions is met. The variance can be filed directly with the DEP Boston office if the work will be undertaken on land within the boundaries of more than one city or town.

MA Wetland Regulations Associations with Other Environmental Programs

Proposed construction, fill, or dredging activities in wetlands and waterways in Massachusetts require careful definition of the resources and the construction and access elements of a project in order to identify applicable regulations and review authority. When projects are proposed in wetlands and/or waterways, project managers should contact the Environmental Compliance Group (ECG) permitting a specialist to review engineering and construction plans so that a permitting path can be identified and coordinated.

The following provides a general description of several of these wetland/waterways regulatory interrelationships:

Relationship of Wetlands Protection to Waterways Regulations

Applicants proposing to discharge dredged or fill material in wetlands under the jurisdiction of the Wetlands Protection Act must obtain a Final Order of Conditions (permit) under 310 CMR l0.00. If a project is below the mean high watermark or in certain rivers, streams, or ponds, a license or authorization may also need to be obtained from the Division of Waterways pursuant to M.G.L. Chapter 91 and 310 CMR 9.00. Projects receiving a Final Order of Conditions, or a Chapter 91 waterways license or authorization only require 401 Water Quality Certification if an Army Corps of Engineers (Corps) authorization for a discharge to wetlands and/or waters is required.

Projects involving the construction or installation of overhead wires, conduits or cables to be attached to an existing bridge without substantial alteration, and constructed and maintained in accordance with National Electric Safety Code may be quickly authorized under the following regulatory provisions of the Chapter 91 regulations. Under Section 9:05(3)(g)1 of the Waterways Regulations (310 CMR) for jurisdictional, non-tidal rivers or streams meeting the 9:04(1)(e) criteria, a valid final Order of Conditions from the local Conservation Commission, coupled with no-loss of navigational space and constructed and maintained in accordance with the National Electric Safety Code, becomes the Chapter 91 authorization and the project does not require a separate Chapter 91 license.

Relationship to MA Environmental Policy Act (MEPA)

The Massachusetts Environmental Policy Act (MEPA; 301 CMR 11.00) allows the Executive Office of Environmental Affairs to review select Massachusetts projects depending upon the amount of impact (thresholds) <u>and</u> whether a state permit is needed relating to the threshold (e.g., exceed a wetlands threshold <u>and</u> need a Water Quality Certificate), thereby instituting MEPA review. Certain thresholds involving

wetlands trigger MEPA review. These thresholds are found at 301 CMR 11.03. Of the several wetland thresholds triggering an Environmental Impact Report (EIR), alteration of one or more acres of salt marsh or bordering vegetated wetland (BVW) are two that potentially could be exceeded for linear projects in particular. Alteration of more than 5,000 sq. ft of BVW or one-half acre of other WOA resource area will trigger an Environmental Notification Form (ENF) submittal to MEPA. A number of other ENF thresholds are also given at 301 CMR 11.03 and must be reviewed for each project to determine MEPA jurisdiction.

Relationship to the Corps Programmatic General Permit for Massachusetts

The New England District of the Army Corps of Engineers (Corps), which issues Federal permits under Section 10 of the Rivers and Harbors Act (structures and dredging in navigable waterways) and Section 404 of the Clean Water Act (wetlands), has instituted Massachusetts Programmatic General Permits (PGPs) that are designed to expedite review of minimal impact work in coastal and inland waters and wetlands within Massachusetts.

Projects (activities) proposed with minimal impacts do not require reporting to the Corps (Category 1), or are to be screened by the Corps and Federal resource agencies (EPA, the Fish and Wildlife Service, and Marine Fisheries) for applicability under the general permit (Category 2). Note: Projects affecting certified vernal pools (CVP) cannot qualify as Category 1 as CVP's are considered Outstanding Resource Waters by DEP under the MA water Quality Standards.

The Corps' "individual" permit process and activities exempt from Corps jurisdiction are not affected by this general permit.

The project must receive a Coastal Zone Management (CZM) consistency certification from the Massachusetts CZM program office as a condition of the Category 2 general permit. Also, the State Historic Preservation Office (SHPO) and Tribal Historic Preservation Officers (THPO) must clear the project with respect to potential impacts to historic or archaeological properties. The SHPO in Massachusetts is the MA Historical Commission (MHC). The THPOs are associated with tribes listed in the Corps PGP (see Corps of Engineers hyperlink below). CZM participates directly in the Corps' screening process and separate CZM filing is not necessary for the initial Corps filing. The SHPO and THPOs, on the other hand, must be notified in writing and a copy of the letters or response letters must be included with the Corps' permit application. Failure to do so causes permit delay.

The DEP in Massachusetts will review Category 2 projects before the Corps. DEP forms for Water Quality Certification are to be used with copies sent to both agencies. Refer to **http://www.nae.usace.army.mil/reg/mapgp.pdf**.

Relationship to Water Quality Certification (Section 401)

Section 401 provides that any applicant seeking a Federal authorization under Section 404 of the Clean Water Act to conduct any activity which may result in a discharge of dredged or fill into the wetlands or waters of the U.S. must provide the Corps with a Section 401 Water Quality Certificate from the State (DEP) that the proposed discharge will not violate applicable Federal or State discharge limitations, water quality standards or other requirements of the state water quality law (314 CMR 4.00 and 9.00 et seq).

Relative to water quality certification aspects of the PGP program, the DEP has issued a generic water quality certification for Category I projects (i.e., qualify as not requiring submission of a separate 401 Water Quality Certification under the Corps Massachusetts PGP). See 314 CMR 9.03 but in general, the temporary or permanent loss of less than 5,000 sq. ft. of wetland and a final Order of Conditions from the local Conservation Commission obviates the need for a 401 application. Replication of permanent wetland loss at 1:1 is necessary to obtain the benefit of this concession. **Note**: The DEP issued Massachusetts Inland Wetland Replication Guidelines in March 2002. That document not only includes replication area design guidance but also monitoring requirements. These matters are tied to the ultimate issuance of a Certificate of Compliance.

When submission of an application is required under 314 CMR 9.04, DEP will evaluate the application according to 314 CMR 9.06 criteria and will issue conditions or deny the certification request. The procedures and criteria established in 314 CMR 9.00 are intended to ensure compliance with the Surface Water Quality Standards as they apply to projects involving the discharges of dredged or fill material.

The Corps is also requiring that the Section 401, Water Quality Certification application, be part of the initial 404 application to the Corps. The MA DEP will be taking the leading role in the alternatives assessment for sections 401 and 404. Those applications are envisioned to be tracking simultaneously rather than 404 followed by 401.

Relationship to Local Bylaws and Ordinances

It should be noted that over 170 communities in the Commonwealth have enacted home-rule wetland and waterway protection through the adoption of local bylaws, ordinances, and regulations which retain or expand the language of the WPA. Consultation at the local level is necessary to obtain the current version of such regulations if they exist for a given community. Projects must conform to the stricter local regulations when they exist.

5.1.2 MASSACHUSETTS WETLANDS PROTECTION ACT FILING - NOTICE OF INTENT

For work in or near wetlands in Massachusetts, an Order of Conditions is likely the most common permit that may be required. Although the work could potentially proceed with either a Request for Determination or under the maintenance exemption, information on management of an Order of Conditions is presented below. For additional information on the regulatory requirements of the Massachusetts Wetlands Protection Act as well as other related requirements, please refer to EP No. 3.

Application For Work Regulated By The MA Wetlands Protection Act - Notice of Intent

As part of the application process, information on the property owner, address, assessors map and parcel number, etc will be required. If the property is owned by National Grid or one of its subsidiary companies or if National Grid or one of its subsidiary companies has an easement on the property, the following steps must be performed to ensure that the encumbrance on the title is properly managed:

1. Obtain the Legal File Number for the affected properties from the Legal Department. **It is extremely important that the Legal Department's File Number be obtained for the affected properties.** This number will allow the Legal Department to track any encumbrances placed upon the properties. It also ensures that future recordings on the property will be on the Book and Page information in the National Grid's Legal Department files. The Legal File Number can be obtained as follows:

   <u>Transmission</u>
   For cross-country lines, refer to the T-Sheets. The T-Sheets are referenced by either the Right-of-Way name or the Line Number and can be obtained either from the Legal Department's Property Management Group or from Transmission Engineering. On the T-Sheets, properties are either cross-hatched (owned by National Grid or its subsidiary companies) or shaded (National Grid or its

subsidiary companies has an easement) and are identified by a Legal File Number. The number typically has the following components:

- Abbreviation of the Line Name
- Identifying Number
- Transaction Number

For example, Legal File Number BP-MW 361-2 identifies property # 361 on the Brayton Point - Medway Line, second property transaction.

Substation
Legal File Numbers for substation properties can be obtained either by:

A. T-Sheets
The T-Sheets will identify the Legal File Number for the substation. In addition, the plan for the substation (H #) will also be on the T-Sheet.

B. Legal Department
The Property Management Group of the Legal Department can provide the Legal File Number for a substation property if given the City/Town, Substation Name/Number and the Company (NEP, MEC, etc).

In either case, the Legal File Number for a substation consists of the letters "GEN" followed by its identifying number (e.g., GEN 14,300).

Distribution
To obtain a Legal File Number for a cross-country distribution line, refer to the discussion on transmission lines. For distribution lines along streets, no legal file number will likely be available.

2. Obtain the Book & Page Number for the Property

Utilizing the Legal File Number, the Legal Department will be able to provide the Book and Page for the property. This Book & Page Number will be utilized in the Notice of Intent (Order of Conditions application). It is very important that the Book & Page utilized is for the original property for which an easement was obtained. If the property was subsequently sub-divided, do not utilize the Book & Page for each of the sub-divided properties.

3. Complete the Notice of Intent utilizing the Book & Page provided by the Legal Department.

Maintenance of an Order of Conditions (Massachusetts Only)

Following a public meeting, the applicable Conservation Commission may act on the Notice of Intent and issue an Order of Conditions. The Order of Conditions must be recorded in the property's chain of title.

To do so, the following steps must be followed:

A. The form below (Order of Conditions Recording Form) must be completed and submitted to the Legal Department. The approval fields on the form are optional and may be utilized if the Project Engineer or the person conducting the permitting wants to have applicable departments approve of the conditions during the 10-day appeal period. This departmental review is recommended so that challenges to special conditions contained in the Order of Conditions can be discussed with the Conservation Commission.

B. The Legal Department will have the Order of Conditions Recorded.

C. The completed form with the recording information will be returned to the person responsible for permitting of the project (the Project Engineer or other company personnel if the Project Engineer has transferred this responsibility in writing) so that the recording information can be returned to the Conservation Commission prior to beginning work. The form should be signed in the space provided by company personnel or a representative prior to submittal to the commission.

Order of Conditions Closeout

For the Order of Conditions to be removed from the property's title, a Certificate of Compliance must be obtained from the Conservation Commission. Once the Certificate of Compliance has been issued, the Project Engineer must submit this information to the Legal Department. The Certificate of Compliance must also be recorded as was done for the Order of Conditions. A Certificate of Compliance Form is provided below which may be utilized to transmit this information to the Legal Department.

ORDER OF CONDITIONS RECORDING FORM

MEMORANDUM

To: Legal Services, Waltham
From:
Date:
Subject: RECORDING OF ORDER OF CONDITIONS – PROJECT –
Project Charge Numbers:

Legal File No.:
D.E.P. File No.:

Approved by Environ. Engineer: _____

Approved by Project Engineer: _____

Approved by Construction Dept.: _____

Approved by Property Legal:_____

Approved by Forester/Arborist: _____

Please have this instrument recorded as soon as possible as construction may not start until it has been recorded.

Recording Data (Unregistered Land)

I have recorded the above instrument at Registry of Deeds in Book _____ and Page
or
Instrument No. _____ on _____ (date).
Filing Data (Registered Land)

I have filed the above instrument at Registry District of the Land Court as Document No. _____
noted on Certificate of Title No. _____on _____(date)

National Grid Agent _____ Date_____

Please return this form to sender.

CERTIFICATE OF COMPLIANCE FORM

MEMORANDUM

To: Legal Services, Waltham
From:
Date:
Subject: CERTIFICATE OF COMPLIANCE - PROJECT - _____

Project Charge Numbers:

Legal File No.:

D.E.P. File No.:

Approved by Environ. Engineer:

Approved by Property Legal:

Please have this instrument recorded as soon as possible.

Recording Data (Unregistered Land)

I have recorded the above instrument at

Registry of Deeds in Book _____ and Page _____ or

Instrument No. _____ on _____ (date)

Filing Data (Registered Land)

I have filed the above instrument at

Registry District of the Land Court as Document No._____

Noted on Certificate of Title No. _____on _____(date)

National Grid Agent_____on_____ _____ _ _(date)

Please return this form to sender upon completion.

5.1.3 SECTION 401 WATER QUALITY CERTIFICATION IN MA

A 401 Water Quality Certification is required under the Federal Clean Water Act for the discharge of dredged or fill material to Waters of the U.S. This certification process gives states the authority to review projects that must obtain federal licenses or permits and that result in a discharge to state waters, fill in wetlands, dredging and dredge material disposal. The purpose of the State 401 review is to ensure that a project will comply with state water quality standards and other appropriate requirements of state law. Regulatory authority for this certification is found in 314 CMR 9.00. Water quality standards referenced in the certification are found in 314 CMR 4.00.

A 401 Water Quality Certification issued by the Massachusetts Department of Environmental Protection (DEP) is a determination that the proposed activity will not violate the Massachusetts Surface Water Quality Standards. The DEP may, as a result of its review, assign special conditions to ensure that water quality is protected, environmental damage is minimized, and other State requirements are satisfied. This certification is necessary for the Federal permit to be valid and any certification conditions become an enforceable condition of the Federal permit.

Coordination with Other State Wetland and Waterways Regulations

Corps Permitting

A Section 404 permit must be issued by the Corps for the discharge of dredged or fill material to Waters of the United States. The term "Waters of the United States" defines the extent of geographic jurisdiction of the Section 404 program which includes "navigable waters and their tributaries, adjacent wetlands and other waters or wetlands where the use, degradation or destruction could affect interstate or foreign commerce." In most situations, the Federal "waters of the U.S." include the resources protected under the Massachusetts Wetlands Protection Act regulations and the other National Grid operating states. For National Grid facilities, this means all waters subject to the ebb and flood of the tide, coastal wetland resources, the Connecticut River, Merrimack River and inland wetlands and streams. A discharge of dredged or fill material includes the physical placement of fill into Waters of the U.S.

A Section 10 Permit is required for projects that have the potential to affect navigation (in specific navigable waters as defined by the Corps). In Massachusetts both Section 404 and Section 10 permits may be authorized under the Programmatic General Permit (PGP) process.

Most "minor projects" (Corps Category I under the PGP; e.g., less than 5,000 sq. ft. of fill in Waters of the U.S.) that receive a local conservation commission Order of Conditions do not need a 401 Water Quality Certification. When required by Corps PGP Category II screening procedures (filling over 5,000 sq. ft. or exempt under the MA Wetlands Protection Act), formal application to the DEP for Water Quality Certification of these impact activities is necessary. Activities with large impacts (over one acre) or discharges to Outstanding Resource Waters (e.g., surface water supplies, certified vernal pools) are required to submit an application to the DEP for 401 review and certification as part of a Corps Individual Permit (Category III).

The criteria for evaluation of applications are designed to avoid or minimize wetland impacts. A practicable alternative analysis is required to achieve this goal. This is consistent with the approach taken in Section 404 Federal wetlands program to meet the goals of the Clean Water Act.

Massachusetts Water Quality Standards for Wetlands

Water quality is a broad concept which incorporates the chemical, physical and biological characteristics of waters and wetlands necessary to support uses such as water supply, fish and wildlife habitat, aquatic life, recreation, and irrigation. Specific numeric criteria to protect wetlands have not yet been developed for the Federal or Massachusetts Section 401 certification programs. However, the State Surface Water Quality Standards (314 CMR 4.00) require the protection of existing uses and the existing levels of water quality to sustain those uses.

National Grid Activities Not Requiring a WQC Application

The following activities do not require an application for Water Quality Certification:

Projects in Wetlands that Do Not Need Federal Authorization Corps) National Grid activities included in this category are:

- "Maintenance, replacement and repair" projects that are replaced in kind at the same location (refer to chapter discussing Corps permitting); and,
- Projects located in any state-regulated buffers of wetlands.

Loss of Less Than 5,000 Square Feet (Project Cumulative) of Wetlands with an Order of Conditions

Activities which have received a final Order of Conditions under the Massachusetts Wetlands Protection Act provided that:

- The final Order of Conditions issued by the local conservation commissions or the DEP, permits work which results in the loss of less than 5,000 square feet of bordering and isolated vegetated wetlands and land under water;
- At least 1:1 replacement of bordering vegetated wetlands under the states mitigation rules [310 CMR Section 10.55(4)(b)]; and,
- The proposed work is not subject to the application requirements at 314 CMR 9.04.

Dredging Less than 100 Cubic Yards

Dredging and dredged material disposal of less than 100 cubic yards provided that a final Order of Conditions has been issued and the proposed work is not subject to the application requirements at 314 CMR 9.04.

Less than 5,000 Square Feet of Isolated Vegetated Wetlands

Any activity in an area not subject to the Wetlands Protection Act (isolated wetlands) provided loss is less than 5,000 square feet, and there is no discharge or fill to any habitat for rare and endangered species or to any outstanding resource water.

National Grid Activities Requiring an Application

More Than 5,000 Square Feet of Wetland Loss

Any activity subject to 310 CMR 10.00 and Section 404 of the Clean Water Act or Section 10 of the Rivers and Harbors Act of 1899 which results in more than 5,000 square feet of wetlands loss.

Outstanding Resource Waters

Any activity resulting in any discharge of dredge or fill material to any Outstanding Resource Water (waters within 400 ft. of public water supply reservoirs, certified vernal pools, and some Areas of Critical Environmental Concern). Outstanding Resource Waters may be associated with either distribution or transmission lines.

More Than 5,000 Square Feet of Isolated Vegetated Wetlands

Any activity in an area not subject to jurisdiction of M.G.L. c. 131 Section 40 which is subject to 33 U.S.C. 125 1, et seq. Impacts which will result in the loss of more than 5,000 square feet cumulatively of bordering and isolated vegetated wetlands and land under water.

Rare and Endangered Species Habitat in Isolated Vegetated Wetlands

Any activity resulting in the discharge of dredged or fill material to an isolated vegetated wetland that has been identified as habitat for rare and endangered species.

Salt Marsh

Any activity resulting in the discharge of dredged or fill material in any salt marsh. This would apply to the transmission and distribution lines located in salt marsh.

Category II (Screening) or Category III (Individual) Section 404 Permit

Any activity subject to a Category II or Individual Section 404 Permit from the Corps of Engineers.

Massachusetts Water Quality Certification Application Process

The DEP has published application forms, instructions, and an application completeness checklist on their web page. The web page can be accessed at **http://www.state.ma.us/dep/appkits/forms.htm**. That is the best source of up-to-date permit filing information. **BRP WW 10** and **BRP WW 11** are the applications for major and minor fill and excavation projects, respectively. **BRP WW 07** and **BRP WW 08** are for major and minor dredging projects, respectively.

Criteria for evaluation 401 Water Quality Certification applications is enumerated in the following sections.

Criteria for the Evaluation of Applications for Discharge of Dredged or Fill Material

The 314 CMR 9.00 lists seven (7) criteria for evaluating applications for discharges of dredged or fill material. These are as follows:

- The regulations enumerated in 314 CMR Section 9.06 prohibit the discharge of fill material if there is a practicable alternative that exists which would have less impact on the aquatic environment. An alternative is considered "practicable" if it is available and capable of being done after taking into consideration costs, existing technology, and logistics in light of overall project purposes.
- If the project is not "water dependent" (it does not require access or proximity to the water) the regulations assume that there are practicable alternatives to the proposed activity which do not involve a discharge or which would have less impact on the aquatic system.
- The discharge of dredge or fill material is prohibited unless appropriate and practicable steps have been taken which will minimize potential adverse impacts to the bordering or isolated vegetated wetlands or land under water, including a minimum of 1:1 restoration or replication of bordering or isolated vegetated wetlands.
- The discharge of dredged or fill material into an Outstanding Resource Water is generally prohibited except for maintenance, repair, and replacement of existing and lawfully constructed structures. Changes to an original structure would not conform.
- The discharge of dredged or fill material to an Outstanding Resource Water specifically identified in the 314 CMR Section 9.08 is prohibited.
- Discharge of dredge or fill material to impound or detain storm water for purposes of controlling sedimentation is prohibited.
- Storm water discharges shall be provided with best management practices to attenuate pollutants and to provide a set back from the receiving water.
- The discharge of dredge or fill material shall be prohibited in the rare circumstances where the activity meets the criteria for evaluation but will result in substantial adverse impacts to the physical, chemical or biological integrity of surface waters.

Variances

The regulations allow for variances to be issued provided the applicant can demonstrate that:

- All reasonable measures have been proposed to avoid, minimize and mitigate adverse effects on the environment; and,
- The variance is justified by an overriding public interest, or is necessary to avoid a certification that so restricts the use of property as to constitute an unconstitutional taking without compensation.

DEP 401 Water Quality Certification Approval Or Denial

The DEP Department of Wetlands and Waterways certifies in writing to the appropriate Federal agency and to the applicant whether or not the proposed project meets applicable water quality standards for wetland fill or dredge projects. Certifications are denied if the criteria of 314 CMR 9.06, 9.07 or 9.08 are not met. The Department sends copies of the 401 Water Quality Certification or denial to the conservation commission; any person who submits written comments during the public comment period; and any others who submit a written request. The certification or denial contains:

- The name and address of the applicant, the address of the proposed activity, and the date of the Department's determination;
- The Federal permit number, the 401 Water Quality Certification Transmittal Number and the Wetlands Protection Act File Number, if applicable and available;
- A statement that there is or is not reasonable assurance that the activity will be conducted in a manner which will not violate applicable Surface Water Quality Standards;
- Any conditions deemed necessary by the Department to insure maintenance or attainment of water quality;
- The date the work may begin. Note: No activity may begin prior to the expiration of the appeal period or until a final decision is issued by the Department if an appeal is filed;
- A statement that the certification does not relieve the applicant of the duty to comply with any other statutes or regulations; and,
- Notification of the right to request an adjudicatory hearing.

Right to Appeal

Section 9. 10(l) allows the following to make appeals including:

- The applicant or property owner;
- Any person aggrieved by the decision who has submitted written comments during the public comment period; and,
- Any ten persons of the Commonwealth pursuant to M.G.L. c. 30A where a group member has submitted written comments during the public comment period.

Any person aggrieved, any ten persons of the Commonwealth, or a government body or private organization with a mandate to protect the environment may appeal without having submitted written comments during the public comment period only when the claim is based on new substantive issues that were not apparent at the time of public notice.

Procedures for making appeals and filing claims for adjudicatory hearings can be found at 314 CMR 9.10(1-4).

5.1.4 MA WATERWAYS REGULATION PROGRAM (CHAPTER 91)

Massachusetts General Law Chapter 91(Chapter 91) regulates all structures that are located in, over, under or across waters of the Commonwealth. It also regulates dredge and fill activities in waters of the Commonwealth. The regulations promulgated to implement Chapter 91 are found in 310 CMR 9.00. The purpose of the program is to preserve and protect the rights of the "public" tidelands by ensuring that such tidelands are utilized only for water-dependent uses or otherwise serve a proper public purpose. These licenses continue to be legal documents with certain specifications and conditions. Changes or modifications to an area subject to a Chapter 91 license may require authorization from the Massachusetts Department of Environmental Protection (DEP) Wetlands and Waterways Division. When a water-crossing project is proposed at a National Grid facility, the Environmental Compliance Group permitting specialist should be contacted to identify whether the project requires Chapter 91 authorization.

Information about the program as well as application forms can be obtained at **http://www.state.ma.us/dep/appkits/forms.htm**. **Note:** In 2001 the DEP issued a more simplified package for Chapter 91 permitting. BRPs WW 01. 03, and 06 were replaced by a category titled "CH91 Waterways License, Simplified License, Permits, Amendments."

Note: Since Chapter 91 licenses are legal, long term documents, National Grid's Legal Department should be contacted to make determinations with respect to filings.

Regulatory Review of Chapter 91

Work and structures located in, over, under or across waters of the Commonwealth are subject to Chapter 91 and are regulated by a number of sections. The following is a review of those sections of Chapter 91 that are most likely to have an impact on National Grid projects.

Note: The term "structure(s)" shall include pipelines, wires and cables.

Section 10

States that the DEP (AKA department) shall have general care and supervision of the harbors and tide waters within the Commonwealth, of the flats and lands flowed thereby, of the waters and banks of the Connecticut River and the banks and waters of the non-tidal portion of the Merrimack River.

Section 12

States that the department may license and prescribe terms for the construction or extension of a dam, road, bridge or other structures, or filling of land, the driving of piles, or the making of excavations, in, over, or upon the waters below high water mark of the Connecticut River or of that part of the Westfield River, in the towns of West Springfield and Agawam, and in, over and upon the waters of the non-tidal part of the Merrimack River below the high water mark. Section 12 goes on to state that "any structures not authorized by the general court or by the department, or made or done in a manner not sanctioned by the department, without a license as hereinbefore provided, shall be considered a public nuisance. The attorney general and the district attorneys within their respective districts shall, at the request of the department, institute proceedings to enjoin or abate any such nuisance."

Section 12A

States that the department may license and prescribe the terms for the construction or extension of a dam, road, bridge or other structure, or the filling of land, the driving of piles, or the making of excavations, in over or upon the waters below the high water mark of any river or stream within the Commonwealth with respect to which expenditures from federal, state or municipal funds have been made for stream clearance, channel improvement or any form of flood control or prevention work, and the provisions of this chapter shall apply to such licenses.

Section 14

States that the department may license and prescribe the terms for the construction or extension of a wharf, pier, dam, seawall, road bridge or other structure, or for the filling of land or flats, or the driving of piles in or over tide water below high water mark, but not, except as to a structure authorized by law, beyond any established harbor line, nor, unless with the approval of the governor and council, beyond the line of riparian ownership.

The department may license and prescribe the terms for the construction or extension of a pipe line, conduit or cable under tide water beyond any established harbor line, provided that such pipe line or conduit is entirely imbedded in the soil and does not in any part occupy, or project into such tide water, and provided also that said department may at any time require any pipeline, conduit or cable to be moved or relocated if channel or alterations demand the same.

Section 15

States that every authority or license granted since eighteen hundred and eighty-six or hereafter granted by the Commonwealth to any person to build a structure or do other work in, over and under the Connecticut River or the nontidal part of the Merrimack

River or in, over or under the waters of any great pond or any outlet thereof below high water mark or upon ground which the tide ebbs and flows, or to fill or to enclose the same, whether such ground is above or below low water mark, or within or beyond one hundred rods from the high water mark, or whether private property or property of the Commonwealth, shall be subject to the following conditions, whether expressed in the act, resolve or license granting the same or not. Said authority or license shall be revocable at the discretion of the general court, or by the department for noncompliance with the terms and conditions set forth therein. The license shall expire as to all work authorized or licensed not completed within five years from the date such authorization or license or such other period of time specified therein; provided, however, that for good cause shown, the department may extend, without public hearing or notice, the construction period of the authorization or license for one or more one-year period(s).

Section 19

States that except as authorized by the general court and as provided in this chapter, no structure shall be built or extended, or piles driven or land filled, or other obstruction or encroachment made, in, over or upon the waters of any great pond below the natural high water mark; nor shall any erection or excavation be made at any outlet thereof whereby the water may be raised or lowered.

Section 21

States that a fee shall be paid to the Commonwealth for the displacement of tidewater from the placement of fill or structures. The fee shall be based on a per-cubic-yard of tidewater displaced.

Section 22

States that a fee shall be paid to the Commonwealth as compensation for installation of structures or fill in tidelands and great ponds. The fee shall be based on a per-square-foot of tidewater occupied.

Section 23

States that every erection made and all work done within tide water, or within the waters of a great pond or outlet thereof, or on or within the banks of the Connecticut River, or the Merrimack River, below high water mark, not authorized by the general court or by the department, or made or done in a manner not sanctioned by the department, if a license is required as hereinbefore provided, shall be considered a public nuisance. Whoever creates such nuisance, (a) shall be punished by a fine of not more than twenty-five thousand dollars for each day such nuisance occurs or continues, or by imprisonment for not more than one year, or both such fine and imprisonment; or (b), shall be subject to a civil penalty of not more than twenty-five thousand dollars for each day such nuisance occurs or continues. The attorney general or the district attorneys within their receptive districts shall, at the request of the department, institute proceedings to enjoin or abate such nuisance, or to restrain the removal of material from any bar or breakwater of any harbor.

Section 35

States that this chapter relative to great ponds shall apply only to ponds containing in their natural state more than ten acres of land, and shall be subject to any rights in such ponds which have been granted by the Commonwealth.

Geographic and Waterway Areas Subject To Regulation

Chapter 91 applies to historically filled tidelands as well as flowed tidelands, so that any filled areas, seaward of the historic high tide line are subject to Chapter 91 jurisdiction. There are two categories of tidelands:

- Private tidelands are those areas between mean high and mean low water (or 100 rods, 1,650 feet). These areas are usually privately owned, but the Commonwealth reserves and protects public rights of fishing, fowling and navigation;
- Commonwealth tidelands start at the low water mark (or 100 rods, 1,650 feet) and extend seaward out to the limit of state jurisdiction (three miles) which are owned by the Commonwealth or held by private persons in accordance with the trust for the benefit of the public.

With respect to National Grid facilities, Chapter 91 regulates all structures located in, over, under or across flowed tidelands and historical filled tidelands. All submerged lands lying below the "high water mark" of:

- The Connecticut River and the non tidal portion of the Merrimack River in Massachusetts;
- “Great Ponds”(ponds with a surface area greater than ten acres in their natural state) - typically associated with National Grid transmission facilities; and,
- Electric power lines crossing Chapter 91 rivers - rivers and streams that have had local, state or federal money spent for flood control.

Activities Regulated Under the Waterways Program

All permanent structures located in filled or flowed tidelands are required to be licensed. These structures include the following:

- Buildings;
- Overhead and underground power lines and their support structures;
- Riprap;
- Bulkhead walls, oil boom structures; and,
- All dredged areas.

Activities in these areas at National Grid facilities may require one of following:

- Waterways License Application (Structure or fill);
- Waterways Permit Application (Dredging project);
- Requests for Determination of Applicability (Maintenance, Repair, and Minor Project Modifications);
- License Amendments.

Typical Activities Regulated

In general, projects involving enlargement or modification to existing structures; changes in uses; construction of new structures; maintenance and improvement in tideland; Great Ponds; rivers and streams that are subject to Chapter 91.

Waterways License/Compliance Procedure

Existing filled tidelands and structures at National Grid facilities located adjacent to those areas subject to the ebb and flood of the tide are required to be licensed. These licenses have detailed drawing specifications and narratives which describe the location, structure or fill dimensions, layout configuration, conditions and maintenance provisions of each licensed feature. These licenses are recorded in the county registry of deeds and with the Massachusetts DEP Wetlands and Waterways. The original recorded licenses are kept in files in the National Grid Property Legal Department in Waltham. Some of these licenses date back to the original construction days of these facilities. Work should not be performed until the existing license structures or areas and proposed work activities (construction) are fully identified. The following steps should be followed before activities are conducted in these jurisdictional areas:

Step 1. A project scoping meeting should be held at the appropriate location to discuss the purpose, preliminary design parameters, operational constraints, budget and preliminary construction schedule. Participants should be represented by Project Engineering/Project, Manager, Environmental Engineering (Northboro), and where appropriate, Legal (Property).

The meeting should result in identifying project feasible alternatives that have the least impact on the resources protected under the Waterways program. Because new licenses can take 9 to 12 months for review and approval, project alternatives should identify minimum jurisdiction while accomplishing the goal of the project.

Step 2. Develop a project schedule, incorporating the time lines identified by the environmental engineer for compliance with the Waterways program (either notification, minor modification or a new or amended license).

Step 3. Initiate agency correspondence prior to contract bidding or when in-house construction begins. If possible, complete agency correspondence before contract bidding or at least before contract signing.

Step 4. When agency approval is obtained, an environmental engineer should circulate all conditions and environmental standards to the above project team.

Step 5. Any subcontractors should be sent all information from Step 4 and be held accountable for meeting all agency requirements.

Step 6. Conduct an on-site pre-construction meeting with the project team and subcontractor supervisors to review all environmental conditions and procedures.

Step 7. Establish an appropriate compliance-monitoring schedule for the project and assign appropriate visitation dates.

Step 8. Conduct "as-built" surveys of new or modified structures to be sent to the Department of Environmental Protection for recording.

Chapter 91 Provisions for Maintenance and Repair

The Chapter 91 Waterways regulations allow existing lawfully located structures and fills to be maintained to the original specifications of the license without notification or a new license.

Terms of License

All new licenses issued by the DEP contain a condition stating the term for which the license is in effect. All licenses shall be in effect for a fixed term not to exceed 30 years, unless otherwise deemed appropriate by the DEP in accordance with the regulations.

Order of Conditions in Lieu of License

There are circumstances in which activities undertaken by National Grid are within jurisdictional areas but for which an individual Chapter 91 filing may not be required [310 CMR 9.05(3)(g)]. Such cases involve the placement of structures or fill in a non-tidal river or stream that does not reduce the space available for navigation and for which a final Order of Conditions under the Wetland Protection Act has been issued and recorded. Examples of these exemptions are:

- Overheads, cables, wires or conduits constructed and maintained in accordance with the National Electric Safety Code;
- Pipelines, cables and conduits entirely embedded in the soil beneath such river or stream; and,
- Bulkheads, revetments, headwalls, storm drainage outfalls, and similar structures that do not extend into such river or stream except as may be necessary for bank stabilization.

The DEP notes, however, that while the above activities do not require Chapter 91 licensing, the applicant must notify the DEP of their intent to perform such projects. The DEP will provide written notification as to whether or not a Chapter 91 authorization is required.

The original Wetlands Protection Act Notice of Intent submitted in lieu of a separate Chapter 91 filing must include a cross-sectional drawing of the proposed facility crossing in relation to the non-tidal river or stream. Wire heights above the water should be clearly noted. The NOI transmittal letter to the Conservation Commission should clearly state that the filing will also serve as the de facto Chapter 91 filing.

5.1.5 MA COASTAL ZONE MANAGEMENT

In 1972, Congress passed the Coastal Zone Management Act (CZMA), which establishes a national policy to "preserve, protect, develop, and where possible, to restore or enhance, the resources of the Nation's coastal zone" and to "encourage and assist the states to exercise effectively their responsibilities in the coastal zone through the development and implementation of management programs to achieve wise use of the land and water resources of the coastal zone." Any applicant for a required Federal license or permit conducting an activity, in or outside the coastal zone, affecting any land or water use or natural resource of the coastal zone of that state, must provide a certification that the proposed activity complies with the enforceable policies of the state's approved program and that such activity will be conducted in a manner consistent with the program. Similar requirements are included for activities conducted by or funded by a federal agency.

In 1978, Massachusetts completed its coastal zone management (MCZM) program, codified in 301 CMR 20.00, and had it approved by the National Oceanic and Atmospheric Administration (NOAA). Included in the plan, are enforceable MCZM program policies with their underlying statutory and regulatory authorities, which put forth Massachusetts' priorities for protection and management of its coastal resources. The MCZM program also provides regional technical assistance, serving as a liaison between federal, state, and municipal authorities on coastal zone issues.

The MCZM Office, administratively located in the Executive Office of Environmental Affairs (EOEA), has been charged with implementation and administration of the approved coastal plan and of the federal consistency review, when required.

MCZM Program

The MCZM Program Plan establishes program policies which embody coastal policy for the Commonwealth of Massachusetts. Recognition of these statements as Massachusetts coastal policy is formalized in various Memoranda of Understanding between MCZM and state environmental agencies. Projects subject to federal consistency review must be consistent with MCZM program policies. MCZM enforces its program policies through existing Massachusetts's statutes and their implementing regulations. MCZM also participates in the Massachusetts Environmental Policy Act (MEPA) review process through which it identifies aspects of a proposed project that appear to be inconsistent with MCZM's program policies.

In addition to program policies, the federally approved MCZM Program Plan lists management principles. These principles are not currently enforceable through existing state statutes and regulations. They are published as guidance to proponents

of activities in the Coastal Zone (generally defined as an area extending landward 100 feet from certain specified roads or transportation lines and seaward three miles from shore) and represent the preferred policy direction of MCZM. MCZM reviews all projects, whether for federal consistency or MEPA review, for consistency with Management Principles and may recommend alternatives or changes to projects in order to achieve consistency with the Management Principles.

The complete list of MCZM program Policies and Management Principles are found at 301 CMR 21.98: Policy Appendix. Select Policies and Principles, most germane to National Grid facilities, are highlighted below. The Policy or Principle numbers listed herein are as they appear in the Appendix. Missing numbers are intentional.

Water Quality

- **Water Quality Policy #1** - Ensure that point-source discharges in or affecting the coastal zone are consistent with federally-approved state effluent limitations and water quality standards.
- **Water Quality Policy #2** - Ensure that non-point pollution controls promote the attainment of state surface water quality standards in the coastal zone.
- **Water Quality Policy #3** - Ensure that activities in or affecting the coastal zone conform to applicable state and federal requirements governing subsurface waste discharges.

Habitat

- **Habitat Policy #1** – Protect coastal resource areas including salt marshes, shellfish beds, dunes, beaches, barrier beaches, salt ponds, eelgrass beds, and freshwater wetlands for their important role as natural habitats.
- **Habitat Policy #2** – Restore degraded or former wetland resources in coastal areas and ensure that activities in coastal areas do not further wetland degradation but instead take advantage of opportunities to engage in wetland restoration.

Protected Areas

- **Protected Areas Policy #1 –** Preserve, restore, and enhance complexes of coastal resources of regional or statewide significance through the Areas of Critical Environmental Concern program.
- **Protected Areas Policy #2** – Protect state and locally designated scenic rivers and state classified scenic rivers in the coastal zone.

Coastal Hazards

- **Coastal Hazard Policy #2 –** Ensure construction in water bodies and contiguous land areas will minimize interference with water circulation and sediment transport. Approve permits for flood or erosion control projects only when it has been determined that there will be no significant adverse effects on the project site, adjacent or down coast areas.

Port and Harbor Infrastructure

- **Ports Policy #1 –** Ensure that dredging and disposal of dredged material minimize adverse effects on water quality, physical processes, marine productivity and public health.

Public Access

- **Public Access Policy #1 –** Ensure that developments proposed near existing public recreation sites minimize their adverse effects.
- **Public Access Management Principle #2 –** Increase capacity of existing recreation areas by facilitating multiple use and by improving management, maintenance and public support facilities. Resolve conflicting uses whenever possible through improved management rather than through exclusion of uses.

Energy

- **Energy Policy #1 –** For coastally dependent energy facilities, consider siting in alternative coastal locations. For non-coastally dependent energy facilities, consider siting in areas outside the coastal zone. Weigh the environmental and safety impacts of locating proposed energy facilities at alternative sites.
- **Energy Management Principle #1** – Encourage energy conservation and the use of alternative sources such as solar and wind power in order to assist in meeting the energy needs of the Commonwealth.

Federal Consistency Review

A project that requires a federal license or permit, is in or affects the coastal zone of Massachusetts, and which meets certain thresholds is subject to federal consistency review. The federal consistency review process is found in 301 CMR 21.00 Coastal Zone Management Programs – Federal Consistency Procedures.

Examples of applicable federal licenses or permits, which trigger consistency review, include:

- Army Corps of Engineers (Corps) Section 404 and Section 10 permits;

- Environmental Protection Agency (EPA) National Pollutant Discharge Elimination System (NPDES) permits;
- Department of Transportation (DOT) Deep Water Ports Act Section 4 license, and River and Harbor Act Section 9 permit; and,
- Department of Energy (DOE)/ Federal Energy Regulatory Commission Section 301(b), Section 402(a)(1)(A) and 402(a)(1)(D) certifications and permits.

The Massachusetts coastal zone is a defined area extending landward 100 feet from certain specified roads or transportation lines and seaward to the extent of the Commonwealth's territorial sea (generally, but not always, three miles from shore) plus all of Barnstable County and the Islands. The coastal zone is mapped in the Coastal Atlas, copies of which are available at public libraries in coastal cities and towns, at MCZM's regional offices, and at the MCZM Office in Boston. Projects which are physically outside the coastal zone, but which may affect the land or waters uses or natural resources of the coastal zone may be subject to federal consistency review.

Thresholds for federal consistency review generally are the same as those for review under the Massachusetts Environmental Policy Act (MEPA) (see 301 CMR 11.00: MEPA Regulations for that agency's review criteria). For example, any project proposed in an Area of Critical Environmental Concern (ACEC) which is also subject to a state license, permit or action (see 301 CMR 12.00: Areas of Critical Environmental Concern for locations of protected areas), any project which entails coastal armoring below mean high water, or dredging of 10,000 or more cubic yards of material is subject to MEPA and; therefore, to federal consistency review. Point-source discharges to coastal waters, disposal of any amount of dredged material at the Massachusetts Bay Disposal Site, and exempt bridge projects are examples of activities not subject to MEPA, but subject to MCZM federal consistency review.

National Grid projects for which a Corps 404/10 permit(s) is required, which represent the vast majority of circumstances involving electric line and substation projects, will undergo federal consistency review as part of the Corps' permit application review process. No separate MCZM filing is made with the Corps for PGP Category 2 permits. The Corps will require the applicant to file separately with MCZM if an individual permit is needed from the Corps.

Application Requirements

There are no specific application forms or fees for federal consistency review. The following documents may be submitted to the Project Review Coordinator at the MCZM Office after a recommended pre-filing meeting to assure relevance of the MCZM consistency review.

1. Application for federal consistency certification includes:
   - A brief description of the overall project;
   - Identification of the specific MCZM enforceable program Policies that are relevant to the project and a description of the manner in which the proposed project is consistent with those policies and their underlying authorities; and,
   - The following statement: "The proposed activity complies with the enforceable policies of the Massachusetts approved coastal management program and will be conducted in a manner consistent with such policies."
2. A copy of the federal license or permit application or, in the case of a discharge, a copy of the draft NPDES permit issued by EPA;
3. A copy of the Secretarial Certificate from MEPA, if applicable;
4. Copies of any applicable state licenses, permits or certifications received for the project. (Do not send application forms unless asked to do so by the MCZM technical reviewer).

Review Process

Once all the required documents are submitted, the review process can begin by the following steps:

1. A project review schedule is sent to the applicant or his or her agent;
2. The project is assigned to an MCZM technical reviewer, who will be responsible for evaluating the materials provided and for making a recommendation to the Director of MCZM as to whether the project is consistent with MCZM's enforceable program policies or not;
3. A public notice of the proposed project is published in the next available Environmental Monitor, a publication of the Massachusetts Environmental Policy Act (MEPA) Unit of the Executive Office of Environmental Affairs. A 21-day comment period begins on the day that the Monitor is published;
4. When all technical and public policy questions raised by the project have been resolved, and all other state licenses and permits have been obtained, MCZM may concur with or deny the applicant’s federal consistency certification.

Massachusetts chose to develop and implement a "networking" coastal management program. Under this approach, MCZM has entered into Memoranda of Understanding with the state agencies that issue environmental licenses, permits and certifications to implement MCZM's enforceable program policies through their regulatory processes. To ensure that all of MCZM's interests are addressed, federal consistency review cannot generally be completed until all relevant state environmental licenses and certifications have been issued.

Review Outcomes

For Corps of Engineers Programmatic General Permit Category 2 filings, the MCZM technical reviewer will participate as part of the Corps review team. The review process at the Corps headquarters is on a fixed schedule to ensure participation by cooperating agencies such as MCZM.

For other projects MCZM will notify the applicant in writing of its concurrence with or denial of the applicant's federal consistency certification. If technical or policy questions remain, or there are outstanding state licenses or permits at the end of the defined review period, MCZM must, by federal regulation, deny consistency.

Projects that are denied certification, either for lack of information (prerequisite state environmental licenses and permits have not yet been issued) or for cause (MCZM disagrees with the applicant's assertion that the project is consistent with its enforceable program Policies) may restart the federal consistency review process by sending a written request to the Project Review Coordinator. If project plans have changed during the review process, it may be necessary to update required documents at that time. A new public notice will be placed in the Environmental Monitor, and the applicable time table will begin again.

Appeal Process

An applicant may also appeal MCZM's denial of federal consistency to the U.S. Secretary of Commerce by filing a notice with the Secretary within 30 days of receipt of MCZM's denial. Copies of the appeal and any accompanying information must also be filed with all of the state and federal agencies involved with the proposed project. Complete information on the appeal process may be found in federal regulation 15 CFR 930 Subpart H.

Programmatic General Permit

The Corps has issued a Programmatic General Permit (PGP) for select project categories in Massachusetts in an effort to streamline the permitting process. The two categories of PGPs applicable to MCZM are briefly described below.

1. Category I (Non-Reporting): Proposed projects with alteration of less than 5,000 square feet. For Category I, it is assumed that the general permit has been determined to be consistent with the MCZM program plan. No MCZM review is required but consistency is inferred.

2. Category II (Screening): Proposed projects with alteration equal to or exceeding 5,000 square feet. For work screened under a Category II, the Corps will coordinate screening with MCZM and will notify applicants if individual MCZM concurrence is required. If a Category II permit is obtained from the Corps, MCZM has granted consistency.

If an Individual Permit is required from the Corps of Engineers, a separate filing is needed for MCZM as described previously.

MCZM Applicability To National Grid

The types of licenses and permits required for projects that are subject to Federal Consistency Review, and therefore MCZM review, have been described. MCZM regulations do not pertain to activities associated with the operation and/or maintenance of existing public utilities. However, proposals for new construction, expansion, or removal of systems or facilities in the coastal zone will generally require an MCZM/federal consistency review if a federal permit is needed.

Some examples of coastal zone activities conducted by National Grid that may eventually require MCZM review include, but are not limited to, the following;

- Any excavation, dredging, construction, or demolition;
- Installation of foundations, poles, or pilings;
- Placement of riprap.

Additional Resources

The Coastal Zone Management Program is codified at 301 CMR 20.00. The Coastal Zone Management Program's Federal Consistency Procedures are codified at 301 CMR 21.00.

In addition, Massachusetts Coastal Zone Management has a website located at: **http://www.state.ma.us/czm**. The website contains detailed information about the MCZM Program, as well as links to other related web sites.

5.1.6 MA WATERSHED PROTECTION ACT

The Massachusetts Watershed Protection Act (MGL Chapter 92: Section 107A) and regulations (350 CMR 11.00) establish a system of controls regarding land use and associated activities which are designed to protect the water supplies associated with several central Massachusetts watersheds. The watersheds protected are Quabbin Reservoir, Ware River (upstream of the intake), and Wachusett Reservoir. The watersheds provide a significant portion of the drinking water for a number of eastern metropolitan communities necessitating that the waters and surrounding land use comply with protective criteria.

The review and regulation of land use activities and/or actions affecting the water supplies and tributaries thereto within certain critical areas is administered by the Metropolitan District Commission (MDC) Division of Watershed Management. The MDC's jurisdiction and scope of review is limited even within the watersheds as will be explained subsequently.

The MDC web site contains up-to-date information on the Act, pertinent regulations and a synopsis of the watershed program. That information can be accessed at: **http://www.magnet.state.ma.us/mdc/wspa.html.**

Definitions

Definitions are given at 350 CMR 11.03. Several are particularly important to National Grid companies. Abbreviated examples are included:

- **Alteration:** Includes the construction or reconstruction of utilities.
- **Department:** The Department of Environmental Protection (DEP).
- **Division:** The Division of Watershed Management of the MDC.
- **List of Affected Parcels:** Relates to maps produced by the MDC Division of Watershed Management, of which National Grid has the copies in the ESCG files (see the Permitting Specialist for access to said maps).
- **Structure:** A combination of materials assembled at a fixed point to give support, or part or parts thereof.
- **Surface Waters:** Water in the watersheds, including any lake, spring, impoundment and pond exclusive of aquifers, groundwaters, man-made farm ponds, and great ponds of the Commonwealth which do not drain into a tributary of Wachusett or Quabbin.
- **Tributary:** A body of running water, including a river, stream, brook or creek, which moves in a defined channel in the ground due to a hydraulic gradient.
- **Watershed(s):** The natural basin from within which water drains or in the natural course would drain into the Quabbin Reservoir, the Wachusett Reservoir, or the Ware River upstream of the Ware River intake.

Jurisdiction

Areas regulated by the Act include lands within 400 feet of the Wachusett or Quabbin reservoirs and 200 feet of tributaries and surface waters. Within this "Primary Zone" any alteration is prohibited, including between 200 and 400 feet of the tributaries and surface waters and on land within floodplains, over some aquifers (to be determined by joint findings by the MDC and DEP), and within bordering vegetated wetlands (BVW); the "Secondary Zone," wherein certain activities are specifically prohibited; e.g., toxic/hazardous waste activities and alteration of the BVW, among others.

Exemptions

There are two exemptions that relate directly to Public Utilities. They are found at 350 CMR 11.05 (11) Maintenance of Public Utilities, and (12) Maintenance of Public Utilities - Wetlands.

11.05 (11) states that the maintenance, repair or expansion of lawfully located structures or facilities used in the service of the public to provide electric service is allowed. However, this work must not impair the quality of water in the Watersheds

as determined by the Division after consultation with the Department. **Note:** This "exemption" is contingent upon a filing with the Division to obtain concurrence that water quality will not be materially impaired. An **approval** is required. This exemption status is not to be confused with the exemption language used in the Wetlands Protection Act.

11.05 (12) states that the maintenance, repair or replacement, but not the substantial changing or enlarging of an existing and lawfully located structure or facility used in the service of the public to provide electric service is allowed. However, such maintenance and repair activities must not materially impair the quality of water in the Watersheds. No filing is required; however, the Division has recommended to National Grid that a Request for Advisory Ruling be filed so they are aware of the activity.

Procedures

There are several types of filings listed at 350 CMR 11.06 to determine if the work proposed is jurisdictional or if there will be an impairment of water quality. The two that are most germane to National Grid projects are Advisory Rulings and Determination of Applicability.

The Advisory Rulings are done via letter format and include such information as a description of the work, maps, deeds, plans, and other relevant information keyed to the request at hand. This filing is usually to determine jurisdictional matters**.**

Most times a Determination of Applicability would be used as it is the primary documentation to ascertain whether the work being proposed would have a detrimental effect upon water quality. The forms and instructions are located on the web at: **http://www.magnet.state.ma.us/mdc/wspaforms.htm.**

A description of construction-related best management practices should be included with any filings to the Division.

Filings under the Watershed Protection Act do not preclude filings under the Wetlands Protection Act, Rivers Protection Act and other federal, state and local laws and regulations for work jurisdictional to those entities.

Maps

Several maps may need to be used to determine jurisdiction. These include aquifer, surface water and tributary maps produced by the Massachusetts Geographic Information System (MassGIS), flood plain maps from FEMA and the Watershed Protection Act Regulated Zones maps also produced by MassGIS. Maps showing jurisdiction are available on the Transmission GIS maintained by the System Forester in Waltham.

5.1.7 MA STORM WATER MANAGEMENT

The Massachusetts Department of Environmental Protection (DEP) Storm Water Management Standards are designed to improve water quality and address water quantity problems by implementation of performance standards for stormwater management. The standards are designed for use under multiple statutory and regulatory authorities of the DEP, including the Wetlands Protection Act (WPA), as amended by the Rivers Protection Act, and the Clean Waters Act.

Note: By March 2008 many local communities will have adopted local bylaws or ordinances addressing stormwater. These are in addition to EPA and DEP programs and must be followed.

Definitions

- **Discharge**: Water or effluent released to a receiving water body.
- **Best Management Practices (BMPs)**: For purposes of stormwater management, structural, nonstructural, and managerial techniques that are recognized to be the most effective and practical means to prevent or reduce non-point source pollutants from entering receiving waters.
- **Critical Areas**: For purposes of the DEP Stormwater Management Policy, critical areas are Outstanding Resource Waters (ORWs), shellfish growing areas, public swimming areas, cold water fisheries, and recharge areas for public water supplies.
- **Non-point Source (NPS) Pollution**: Pollution of surface or groundwater supplies originating from land use activities and/or the atmosphere, having no well-defined point of entry.
- **Point Source Pollution**: Pollution of ground or surface water supplies at well-defined “points” or locations.
- **Pollution Prevention Plan**: A site-specific plan identifying erosion potential and remedial methods to prevent pollutants, including sediment, from reaching receiving waters. The plan must incorporate written inspections, logs and remediation of failing erosion controls. The NPDES SWPPP can serve as the required plan.

- **Sheetflow**: Runoff that flows over the ground as a thin, even layer rather than concentrated in a channel.
- **Stormwater**: Runoff from a storm event, snow melt runoff, and surface runoff and drainage.
- **Stormwater Discharge**: For the purpose of this document, a stormwater discharge is defined as any stormwater that culminates in a point source which discharges directly to waters of the Commonwealth, or to a separate stormwater sewer which in turn discharges to waters of the Commonwealth.
- **Vegetative Filter Strip (VFS)**: A type of BMP which EPA defines as a "permanent, maintained strip of planted or indigenous vegetation located between non-point sources of pollution and receiving water bodies for the purpose of removing or mitigating the effects of non-point source pollutants such as nutrients, pesticides, sediments, and suspended solids." A VFS, which decreases velocity and removes pollutants from the stormwater, is designed to receive overland flow from an upland development. Also referred to as a Vegetative Buffer Area.
- **Waters of the Commonwealth**: Broadly defined to include all waters within the jurisdiction of the Commonwealth, including, rivers, streams, lakes, ponds, springs, impoundments, estuaries, wetlands, coastal waters, and groundwater.
- **Wetland Resource Area**: Protected areas specified in the Wetlands Protection Act. Specifically, these areas are banks, bordering vegetated wetlands, land under waterbodies and waterways, land subject to flooding, coastal areas, and riverfront areas specified in the Act.

Regulatory Authority

In January 2008, DEP's stormwater standards were hitherto fore policies incorporated into the MA Wetlands Protection Act and the 401 Water Quality Certification Program. The standards are now written into those regulations and apply to all Notices of Intent and 401 Applications. Pollution Prevention Plans are now required elements of the standards.

For new development, the stormwater management standards are intended to be applied during routine project reviews by Conservation Commissions or the DEP under the Wetlands Protection Act and 401 Water Quality Certification Program. For remediation of existing discharges, the stormwater management standards are to be applied on the DEP's authority through the Clean Waters Act.

For new development or redevelopment, Conservation Commissions or the DEP will regulate stormwater through a WPA Order of Conditions by requiring conditions to meet certain performance standards. For point source discharges without a National Pollutant Discharge Elimination System (NPDES) permit, Conservation Commissions

or the DEP will impose conditions on the quality and quantity of the stormwater discharge, provided the point source is within a resource area or buffer zone.

For existing discharges, the DEP will use watershed assessments and remedial action under the Clean Waters Act. Existing discharges include municipal storm sewer systems and drainage structures from developed areas with point sources to wetlands or water bodies.

Applicability

The stormwater management standards apply to individual, commercial and institutional projects, including site preparation, construction, redevelopment and ongoing operation having point source discharges of stormwater to waterbodies or wetlands.

The stormwater management standards are designed to control point source discharges. Point sources are closed or open point sources discharging to a water body or wetland.

From January, 2008 the standards are being applied to all Notices of Intent and 401 Water Quality Certificates. A Pollution Prevention Plan must be developed for projects requiring such permits.

Storm Water Management Standards

The following standards, from the MADEP Stormwater Management policy, should be complied with or implemented, as appropriate:

- No new Stormwater conveyance may discharge untreated stormwater directly to or cause erosion in wetlands or water bodies.
- Stormwater management systems must be designed so that post-development peak discharge rates do not exceed pre-development peak discharge rates.
- Loss of annual recharge to groundwater should be minimized through use of infiltration measures to the maximum extent practicable.

- New development stormwater management systems must be designed to remove 80% of the average annual load (post-development conditions) or Total Suspended Solids.
- Stormwater discharges from areas with higher potential pollutant loads require the use of specific stormwater management BMPs. The use of infiltration practices without pretreatment is prohibited.

- Stormwater discharges to critical areas must utilize certain stormwater best management practices approved for use in critical areas. A 44% TSS pretreatment is required prior to recharge.
- Redevelopment of previously developed sites must follow and submit the Redevelopment Checklist and Pollution Prevention Plan. However, if it is not practicable to meet all the standards, new stormwater standards must be designed to improve existing conditions.
- Erosion and sediment controls must be implemented to prevent impacts during construction or land disturbance activities.
- All stormwater management systems must have an operation and maintenance plan to ensure that systems function as designed.

Filing Procedure

Stormwater Management has been incorporated into the NOI form dated 2/21/08 at Part C. The revised Massachusetts Stormwater Management Handbook can be found at
http://www.mass.gov/dep/service/regulations/newregs.htm.

5.1.8 MA CONSTRUCTION DEWATERING

Ground or surface water withdrawals and subsequent discharges to surface waters are typically regulated under the National Pollutant Discharge Elimination System (NPDES) permitting program and may be affected by state specific wetlands legislation. These discharges may be associated with construction site dewatering activities or facility operations. The NPDES program is designed to track point sources, monitor the discharge of pollutants from specific sources to surface waters, and requires the implementation of controls necessary to minimize the discharge of pollutants.

In Massachusetts' construction site dewatering of trenches or excavations subject to groundwater infiltration or storm water inflow with discharge to wetlands or surface waters is typically regulated under a NPDES General Permit for Construction Dewatering Facilities (see: **http://www.epa.gov/docs/fedrgstr/epa-water/2002/september/day-23/wz-23898.htm**). This general permit was issued by EPA Region I on September 23, 2002 for the States of Massachusetts and New Hampshire (61 FR 19284).

Large construction projects with significant dewatering flows, sites subject to groundwater contamination, or discharges that contain other than ground or storm water may require a site- specific, individual NPDES permit from the EPA.

Dewatering discharges to municipal or private storm sewer systems may also require the permission of the system owner and the filing of a permit application.

See Section 6.0, Storm Water Management – Massachusetts, for further details regarding construction site dewatering associated with storm water management.

Massachusetts Wetlands Requirements

For construction dewatering, a Wetlands Notice of Intent may be required under the Massachusetts Wetlands Protection Act if the dewatering is likely to change the water table, alter drainage characteristics or flow patterns, or affect water quality in a wetland resource area. However, routine maintenance and repair activities are generally exempt from the Act for legally existing electric, gas, water, and telecommunication services used in the service of the public.

Massachusetts requires that discharges covered by the construction general permit comply with the Massachusetts Wetlands Protection Act and applicable storm water performance standards required by State regulation or policy. Construction activities subject to 310 CMR 10.00 (wetlands) must obtain and comply with a Wetlands Order of Conditions issued by the local Conservation Commission with jurisdiction over the site where affected construction activities will take place (see Section 6.0, Storm Water Management - Massachusetts).

Facility Operations

Facility operations which result in discharges to surface waters require permitting through NPDES. Application for a permanent NPDES discharge is a complex and time-consuming process. For further information regarding the permitting process, please contact the Environmental Compliance Department.

Typical Activities Regulated At National Grid Facilities

The following list includes examples of National Grid activities that may involve construction dewatering and as a result be subject to regulation under a NPDES permit or wetland rules:

- Any trenching, excavation or dredging for structures, equipment or transmission lines;
- Construction of foundations, support structures, etc.;
- Access road construction (associated drainage structures and other utilities);
- Manhole dewatering.

Please refer to National Grid's Environmental Procedure (EP) No. 1 Waste Management and Recycling Manual, Chapter 14.0, for additional information on manhole/vault pumping procedures.

At this time, National Grid does not hold any NPDES Permits for permanent surface water discharges in Massachusetts.

General Approach to Permit Authorization for National Grid Facilities - Construction Dewatering

Prior to the initiation of construction site dewatering activities, National Grid personnel should consider the following factors to ensure compliance with the pertinent environmental regulations potentially affecting a construction project. It should be noted that even one-time dewatering flows of short duration may result in serious water quality impacts depending upon the volume and the physical, chemical, and biological characteristics of the dewatering flow. Therefore, adequate planning should be undertaken in advance of any dewatering activity in order to fully understand the nature of the dewatering flow to be generated and the associated regulatory implications.

For sites where construction activities are taking place, determine the overall size of the area to be disturbed.

If one acre or more is to be disturbed, and storm water may be a component of the construction dewatering flow, follow the procedures outlined in Section 6.0 entitled Storm Water Management – Massachusetts. Coverage under the General Permit for Storm Water Discharges from Construction Activities will be needed in addition to coverage under the General Permit for Construction Dewatering as described below.

Determine if groundwater or soil contamination is likely to exist on site.

For construction sites with groundwater or soil contamination located in Massachusetts, Scott Pellerin at the EPA (617/918-8678) will rule on whether or not a temporary exclusion from the NPDES permitting process can be issued for the dewatering activity. If such an exclusion is possible, drinking water standards must be met in Massachusetts for surface water discharges resulting from contaminated dewatering flows.

Sites involving groundwater or soil contamination may entail significant ancillary environmental issues which should be explored fully with the appropriate state environmental agency well in advance of any planned construction or dewatering activities. For state-regulated sites, it may be necessary to conduct the dewatering as a

Utility-Related Abatement Measure (URAM) or in accordance with the requirements of an environmental deed restriction.

If no significant groundwater or soil contamination is likely to exist, file a Request for General Permit Coverage with the Massachusetts DEP at least 30 days prior to anticipated discharge.

The Request for General Permit Coverage is a brief form that is specific to each State. Information which must be generated to complete the form includes the number of discharge points, and the duration, volume, and rate of the discharge. Wastewater treatment of the discharge must be described and the receiving water to be impacted by the discharge must be identified. Additionally, a topographic map showing the location of the site, latitude and longitude, SIC codes, data on storage of chemical or petroleum products, a history of the land use at the site, and basic facility and operator information must be included with the request form.

Upon receiving a complete request for permit coverage, with the concurrence of the affected State, the EPA will notify National Grid within 30 days as to whether or not a dewatering discharge will be authorized under the general permit.

The applicant should submit a one-page form (Appendix D, BRP WM 10) available from the Massachusetts DEP Division of Watershed Management. In Massachusetts, the request form must be accompanied by a cover letter, a transmittal form and a check for $250. The transmittal form is available from the DEP web site at http://www.state.ma.us/dep/appkits/wm05_13.pdf (the request form is not available on- line at this time, but can be obtained by contacting Bob Kubit of the DEP at 508-767-2854 or robert.kubit@state.ma.us). This package should be sent to:

Massachusetts Department of Environmental Protection
Division of Watershed Management
627 Main Street, 2nd Floor
Worcester, MA 01608
Att: Bob Kubit

A copy of this package, less the transmittal form and fee should also be sent to the EPA:

EPA – New England, Region I
1 Congress Street, Suite 1100
Boston, MA 02114-2023
Att: Olga Vergara

Her telephone number is 617-918-1519 and her fax number is 617-918-2064.

After the DEP has reviewed the request form in order to determine eligibility under the general permit, and if such eligibility is established (i.e., no individual permit is required), the EPA will be so notified and then this agency will actually issue the general permit.

If authorization for discharge under the general permit is not received, determine if a NPDES individual permit application or other action may be required.

If permit coverage is denied, the EPA will issue National Grid further instructions as to how to obtain individual permit coverage or otherwise modify its proposed dewatering activity. It is important to note that planned dewatering activities are not to be carried out at a construction site, even after the close of the thirty day review period, if such a denial is received.

If authorization for discharge is received under the general permit, comply with the permit conditions, effluent limitations and monitoring requirements detailed in the general permit.

Monitoring of the dewatering effluent must take place on a weekly basis for flow, total suspended solids, pH, and oil & grease (certain exemptions apply, see the general permit language). The results are to be summarized monthly on a Discharge Monitoring Report (DMR) which is to be kept on-site, and must be available for inspection to the EPA or state officials. DMRs and data/documentation used to complete the DMRs should be kept on record for a period of at least three years after the report, data, or document was originally generated.

For construction sites in Massachusetts, determine if the dewatering activity is regulated under the Massachusetts Wetlands Protection Act.

If dewatering activities do not involve utility related routine maintenance and repair activities, and may alter the drainage characteristics or flow patterns of wetlands or surface waters; lower the water level of a surface water or the groundwater table; or impact water quality, the Conservation Commission with jurisdiction over the site should be asked to determine whether or not a Wetlands Notice of Intent is required (see Section 1.0, Massachusetts Wetland Protection Act and Regulations for further details) via the submission of a Wetlands Request for Determination of Applicability form.

If discharge of dewatering flow will be to a private or municipal storm water sewer, contact the owner and determine if specific sewer use requirements exist.

The discharge of flows other than storm water runoff to a municipal storm sewer may require the prior approval of the municipality and the submission of a permit application, including documentation that any wetlands regulations have been met and that the appropriate NPDES permit has been obtained.

Private storm sewer owners may be subject to an individual or general storm water permit with specific restrictions on the type of non-storm water flows that may be released to the storm sewer. Therefore, permission should always be obtained in advance from the owner.

When dewatering activities have concluded or when modifications or alterations to such activities are planned under the construction dewatering general permit, notify the EPA and the MA DEP.

The notification should contain the name, mailing address, and location of the facility for which the notification is submitted, and the NPDES permit number that has been assigned to the discharge. For further information on notification procedures, contact the DEP Division of Watershed Management in Massachusetts.

Consideration to Avoid Construction Dewatering Permitting

The following is offered for consideration as potential means to obviate the needed for construction dewatering permits. It is advisable to check with the appropriate permitting agency if there is any doubt as to whether a permit is needed.

NDPES and state-issued construction dewatering permits involve discharges to surface waters. Those surface waters may be streams, lakes, the ocean, wetlands, etc., as well as man-made conveyances (e.g., storm drains) to those waters. If a non-contaminated discharge to those resources can be avoided, no permit is likely to be needed. Consider discharging to an upland area (i.e., through a wetland filter bag or haybale corral) where recharge to the ground will occur prior to reaching surface waters. If water from the upland discharge forms a channel and reaches the surface water/wetland, a conveyance (point source) has been created and a permit is needed. If the construction discharge is to another trench in a controlled fashion to avoid overtopping, a discharge to surface waters will be avoided and no NPDES-related permit needed.

For dewatering within the boundary of a wetland, consult with the appropriate EPA or state agency. A case can be made that if the construction dewatering discharge is designed (wetland filter/bag/haybale corral) to remove sediment (a pollutant under the Clean Water Act) and if the water is not contaminated, a permit may not be required because the water is not contaminated, because the water is merely re-circulated and is returned to its source water, the wetland.

5.2 RHODE ISLAND WETLANDS AND WATER PROTECTION

5.2.1 RI FRESHWATER WETLANDS REGULATIONS

The State of Rhode Island through the Department of Environmental Management (DEM) has imposed comprehensive regulation on activities within or near freshwater wetlands in the state. The Rules and Regulations Governing the Administration and Enforcement of the Freshwater Wetlands Act (April, 1998) were enacted pursuant to §§ 2-1-18 through 2-1-25 of the Rhode Island General Laws of 1956 (the "Wetlands Act") and are available on DEM's website at **http://www.state.ri.us/dem/.** While the Wetlands Act is relatively short, the DEM has implemented it with extensive regulations. Amendments to the Rules and Regulations, dated August 2001, became effective September 19, 2001.

Jurisdiction

Regulatory Overview

The Rhode Island General Assembly has delegated to the DEM the jurisdiction to regulate "freshwater wetlands" which are defined as including marshes, swamps, bogs, ponds, rivers and streams, flood plains and floodways, areas subject to flooding or storm flowage, and other resources. The DEM also regulates, as freshwater wetlands, buffer zones of 50 feet from the edge of any bog, marsh, swamp or pond, 100 feet from the edge of any river or stream that is less than 10 feet wide and 200 feet from the edge of any river or stream that is more than 10 feet wide.

In 1996, the General Assembly delegated to the Coastal Resources Management Council (CRMS) exclusive authority over freshwater wetlands "located in the vicinity of the coast." R.I.G.L. § 46-23-6(2)(E). As directed by the General Assembly, the CRMC and the DEM have agreed upon a line that establishes the jurisdictional boundary of each agency over freshwater wetlands. The line is shown on maps available at the DEM, CRMC and many city and town halls and generally follows state and local roads.

Based on the 2001 Amendments, as of January 1, 2002, CRMC became the sole authority for all permits involving freshwater wetlands in the vicinity of the coast.

For linear projects, if the project is entirely within either a CRMC Special Area Management Plan or within 200 feet of a coastal feature, as defined by CRMC, then CRMC will be the freshwater review agency. Absent those conditions, DEM retains

control. For linear projects that cross the jurisdictional boundary, the agencies shall jointly determine the freshwater review agency on a case-by-case basis in response to a written request from the applicant to CRMC.

In 2007, RIDEM adopted a mandatory Self-Certification Program for its Freshwater Wetlands Permit. Refer to EG-302RI for more information.

Projects Covered

The DEM has several levels of permits and regulation depending on the anticipated impact of a project on a wetland resource.

Section 2-1-21 of the Wetlands Act states that no person shall "excavate, drain, fill, place trash, garbage, earth, rock , or other materials or effluents upon; divert water flows into or out of; dike, dam, divert, change, add to or take from or otherwise alter the character of any freshwater wetland" without obtaining a permit. As a result, any activity which involves excavation or earth work within a wetland or regulated buffer zone will require a DEM review and approval unless the activity is exempt.

Exempt Activities

Rule 6 of the Freshwater Wetlands Regulations lists 16 activities that are exempt from permitting requirements. Rule 6.01(D) lists a number of general restrictions applicable to all exempt activities, including the following:

- Best management practices for erosion and sediment controls must be used and maintained in an effective operating condition during the activity, and all exposed soil and other fill must be permanently stabilized at the earliest possible date. (For guidance see Rhode Island Soil Erosion and Sediment Control Handbook and Rhode Island Stormwater Design and Installation Standards Manual);
- No activity exempted herein may jeopardize the continued existence of a rare wetland type or a rare species; likewise, no activity exempted herein may destroy or adversely modify the critical habitat of such species;
- Following a limited activity, all equipment used in installation or maintenance activities shall be removed from any wetland; and,
- All wetlands functions and values must be protected to the maximum extent possible so as to prevent pollutants, sediment, direct discharge of stormwater runoff or any material foreign to a wetland or hazardous to life, from entering any wetland.

The specific exempt activities which are applicable to National Grid projects in Rhode Island include the following:

- **Utility emergencies:** Emergency access and repair or replacement of utility lines, poles, structures, equipment or facilities which is necessary as a result of storm damage, acts of vandalism, accidents or equipment failure provided that all affected wetlands are fully restored following completion of the repair or replacement. (Rule 6.09.)

- **New utility lines:** Installation of new utility lines, poles, structures, equipment or facilities only where installation occurs on, above or beneath existing or approved paved roadways and their existing or approved cleared shoulders or existing or approved railroad beds and their existing or approved cleared shoulders; and anti-seepage collars are used as appropriate to prevent sub-draining effects on wetlands, subject to conditions including:

    - The project does not cause any diversion of ground or surface water to or from any wetlands;

    - The pre-construction contours are restored immediately upon installation;

    - Work in any wetlands in the easement is undertaken during low flow periods;

    - All disturbed areas are re-vegetated after restoring contours; and,

    - The project design incorporates best management practices for dewatering excavated areas. (Rule 6.10.)

- Limited cutting or clearing of vegetation in freshwater wetlands when:

    - The cutting is to remove tree limbs or dead or diseased trees or shrubs which, if left unattended, pose a threat to individuals, dwellings, structures or safe vehicle movement over roads and driveways; or

    - The cutting is within existing or approved cleared utility rights-of-way and is restricted to only that necessary to maintain integrity of the utility line or pipe itself and to maintain access for maintenance, inspection and/or repair of poles, structures and equipment within the right-of-way; or

- The cutting is on or along property lines for survey purposes or is on an established transect line to allow for access on foot when conducting environmental assessments, and is no greater than 5 feet in width. (Rule 6.02(A), (G) and (H).)

- Limited maintenance and repair activities to existing facilities within wetlands provided that the maintenance activity "does not increase either vertically or horizontally the physical size of any existing structure." The regulation notes that "some limited structural changes may be exempt as specifically provided below." The allowable maintenance and repair activities are as follows:

  - Inspection, maintenance and repair to those utility poles, structures, equipment and/or underground lines or pipes which are necessary to provide utility services to the public; or

  - Replacement of utility poles, including changes in physical size, without any change to existing or approved cleared rights-of-way; or

  - Repair and replacement of utility lines attached to existing or approved bridges or in existing or approved roadways and railway beds provided anti-seepage collars are used as appropriate to prevent sub-draining effects on the wetland. (Rule 6.03(O) through (Q).)

  - Replacement of certain drainage structures and repair to or maintenance of stream crossings under conditions specified in the Rules (Rule 6.03(b) and (F)).

  - Emergency environmental protection – emergency installation of environmental protection structures and activities directly associated with the emergency containment and clean up of oil and/or hazardous materials in wetlands including from leaking underground storage tanks, subject to conditions provided in the Rule (Rule 6.07.).

  - Site remediation activities in connection with the release of oil and/or hazardous materials subject to conditions provided in the Rule (Rule 6.08.).

General Federal and State Wetland Permit Coordination Overview

When conducting work in freshwater wetlands in Rhode Island, applicants are also subject to Section 404 of the Clean Water Act (CWA) as administered by the Army Corps of Engineers (Corps). In some cases, separate application is made to the Corps when proposing activities in wetlands. Refer to **http://www.nae.usace.army.mil/reg/rhdst.htm**.

Additionally, a copy of the state wetlands application may be forwarded to DEM Office of Water Resources to receive Section 401 Water Quality Certification (WQC). When projects qualify under the Corps Programmatic General Permit (PGP), the Corps issues a Determination letter that the project qualifies, but cannot precede without State WQC if it is determined to be necessary. The applicant must then forward a copy of the Corps determination letter requesting a DEM WQC.
It should be noted that Corps' wetlands locations may differ from state designated locations (e.g., perimeter wetlands, riverbank wetlands). Therefore, when establishing wetland boundaries, both State and Federal boundaries need to be considered.

APPLICATION PROCESS

Types of Applications

The Wetlands Regulations list many different types of applications: The three most important from National Grid's perspective are the Request for Approval of Emergency Alteration, the Request for Preliminary Determination and the Application to Alter a Freshwater Wetlands. Note: Based on the 2001 Amendments, Section 8.02 Signatories to Applications, Nixon Peabody LLP in a letter to National Grid dated May 15, 2002, recommended that applications be signed by a Narragansett Electric Company officer. In cases when Narragansett Electric does not hold title to the property containing the wetlands, the Company should demonstrate as part of the freshwater wetlands filing that it has condemnation authority or has easement rights in the property.

1. **The Request for Emergency Alteration** may be made and granted verbally when the emergency poses an "imminent threat to the public health and safety." A utility or other party seeking such approval must:

   - Explain the need for the emergency alteration;
   - Explain why it represents an imminent threat;
   - Describe the location and the proposed action to correct the problem;
   - Identify a person responsible for overseeing the activity; and,

- Describe the proposed restoration of the wetland area following the emergency alteration.

An Emergency Alteration Permit is limited to ten (10) days unless written approval for an extension is received from the DEM. An applicant for an emergency permit must submit an "as built" plan or plan for restoration of the site not later than forty-five (45) days after the incident. (Rule 9.01.)

2. **A Request for Preliminary Determination** under Rule 9.03 is used to obtain from the DEM a determination as to (i) whether DEM has jurisdiction, (ii) whether the proposed project constitutes a significant alteration and (iii) if not, to obtain a permit for the project as an insignificant alteration. In order to be permitted as an insignificant alteration, the applicant must demonstrate to the DEM that:

- Any impacts, due to projects or activities which could alter freshwater wetlands and/or wetland functions and values have been avoided;
- Best management practices and other mitigative features were incorporated to avoid a significant alteration of wetlands and to protect wetland functions and values;
- Any impacts resulting from physical loss or permanent change of wetland characteristics are so limited in scope, area and/or duration that they could only result in minimal change or modification to the natural characteristics, functions and/or values;
- The project and/or activities will not result in any random, unnecessary and/or undesirable alteration to any freshwater wetland; and,
- The project will comply with the review criteria set forth in Rule 11.02.

The review criteria contained in Rule 11.02 consists of 26 impacts on various wetlands, features or functions and values (e.g., "significant reduction in the overall wildlife production and diversity of a wetland.") The Wetlands Regulations contain as Appendix 1, a list of 9 types of activities which are offered as examples of insignificant alterations. Item 6 which is relevant to National Grid's activities in Rhode Island provides as follows:

Utility line or pipe installation where:

- The installation of the line or pipe is taking place within an existing maintained (cut/cleared) utility easement which already contains utility lines or pipes;
- Wetlands existing in the maintained (cut/cleared) existing utility easement are only temporarily altered to install the line or pipe;

- Existing culverts and the flow of water under bridges in roads or highways are not permanently blocked or disrupted by going under or attaching to such structure;
- The project does not cause any diversion of ground or surface water to or from any wetlands;
- The preconstruction contours are restored immediately upon installation;
- All work in any wetlands in the easement is undertaken during low flow periods;
- All disturbed areas are revegetated after restoring contours; and,
- The project design incorporates best management practices for dewatering excavated areas. (Appendix 1(C)(6).)

3. **Application Requirements to Alter a Freshwater Wetland** are extensive and generally are prepared for National Grid by an environmental consultant. The applicant must flag (mark) wetlands on the property that is the subject of the application, submit site plans showing the location of the wetlands and the extent of the project and all supporting reports and information which will demonstrate the appropriateness of issuance of the requested permit. The regulations require a complex functional analysis which is specified in Rule 10.03 and Appendix 6 of the Wetlands Regulations. The review process is extensive and includes public notice to abutters within 200 feet of the project. The DEM will conduct a public hearing only if it determines that any comments it has received are substantive. The standard which the DEM uses to review a full application is whether the project represents a "random, unnecessary and/or undesirable alteration of any freshwater wetland." (Rule 9.05.)[1]

Time Frames and Schedules

The Wetlands Regulations do not specify a time period within which a request for a preliminary determination must be decided. However, it is likely that such a request may take ninety (90) days or more for a complicated project. The Wetlands Act and consequently the Wetlands Regulations are specific about the time periods in ruling on a full application. The regulations require the DEM to send a notice of the application within fourteen (14) days after receipt of a completed application. The notice commences a forty-five (45) day notice period. Following the notice period, the DEM will either schedule a public hearing or decide the application. In reality, a decision on a full application for a large project will generally take at least four to six months and can take a year or more.

[1] Rule 9.05(D) states that DEM will require a "Water Quality Certificate" for applications to alter wetlands where it identifies a water quality concern. This review is internal to DEM and does not require a separate application.

A Preliminary Determination is valid for four (4) years from the date of issue and may be renewed for one additional two (2) year period. Rule 9.03(D)(6). A full permit to alter wetlands is valid for one year from the date of issue and is subject to renewal for three (3) additional consecutive one (1) year periods. (Rule 9.05(E)(3)(f) and (g).)

5.2.2 RI COASTAL RESOURCES MANAGEMENT COUNCIL REGULATION

The Rhode Island Coastal Resources Management Council (CRMC or Council) has broad jurisdiction to regulate activities in the coastal region. In addition to activities "within, above or beneath the tidal water of the state, the CRMC has jurisdiction 200 feet inland from the coastal feature (e.g., shoreline, barrier beach, coastal wetland or contiguous freshwater wetland.) CRMC also has jurisdiction over certain other activities more than 200 feet from the shore, including power generating plants, and most recently has been given jurisdiction over freshwater wetlands "in the vicinity of the coast." (R.I.G.L. § 46-23-6). Finally, the Council has been designated the "coastal zone agency" under applicable provisions of the federal Coastal Zone Management Act.

The Council has implemented its jurisdiction by the adoption of the "Coastal Resources Management Program" (the "Program" which is occasionally referred to as the "Red Book"). The Program is available in printed form from the Council, and at www.crmc.state.ri.us/regs/index.html.

JURISDICTION

Regulatory Overview

Under the Program, the CRMC exercises jurisdiction over tidal waters (including coastal ponds), shoreline features and areas contiguous to shoreline features. Shoreline features include the following:

- Coastal beaches and dunes;
- Barrier beaches;
- Coastal wetlands;
- Coastal cliffs, bluffs and banks;
- Rocky shores; and,
- Man-made shorelines

As noted above, the CRMC has explicit jurisdiction over certain inland activities, including power generating plants, petroleum storage facilities and chemical or petroleum processing.

In the Program, the Council has included a matrix for each of the six types of waters (Type 1 is conservation area and Type 6 is industrial waterfronts and commercial navigation channels) which specifies what activities are allowed in each of the resource areas. In some cases, the activities are prohibited and in others they are allowed with a Category A or Category B Assent from the Council. A Category A Assent is for routine matters that are not generally reviewed by the full Council. A Category B Assent requires formal notice to abutters and other interested parties and consideration and approval by the full Council.

The Rhode Island General Assembly has in § 46-23-15 designated the CRMC as the "coastal zone agency" for purposes of the federal Coastal Zone Management Act of l972, including the review of consistency certifications by applicants for federal licenses or permits under 16 U.S.C. § 1456.

Projects Covered

The Council's jurisdiction is very broad over activities within 200 feet of the shoreline features noted above. Thus, nearly any activity involving excavation, earth work or construction within 200 feet of tidal water or a shoreline feature will require CRMC review and approval. In addition with the newly granted authority over freshwater wetlands, any work impacting freshwater wetlands within the coastal vicinity will be subject to CRMC review.

The line separating CRMC and DEM jurisdiction over freshwater wetlands generally follows Route 1 in South County and generally follows roads and streets along the coast. In planning a project near the coast, the applicant should review the detailed jurisdictional maps that are available at the DEM, CRMC and many City and Town Halls.

Exempt Activities

The CRMC does not have explicit categories of exempt activities except in its Freshwater Wetlands regulations. However, the executive director and other officials of the Council have the authority to grant a "Catastrophic Storms Assent" or an "Imminent Peril Assent" (Section 180) under appropriate circumstances. The Council also provides expedited review and approval for maintenance activities on existing facilities and, frequently, will grant a Finding of No Significant Impact (FONSI) for

activities within 200 feet of a coastal feature that will have little or no impact on coastal resources. (Section 110.4) The exemptions in the CRMC's Freshwater Wetlands regulations are identical to those in the DEM's Freshwater Wetlands regulations, including exemptions for utility line maintenance, repair and in some circumstances, replacement.

APPLICATION PROCESS

Application Requirements

The CRMC application is a single-page form which requires, among other things, an accurate description of the proposed work and a listing of names and addresses of abutting property owners. Generally the application form is accompanied by detailed plans showing the proposed work within 200 feet of the coastal feature and a narrative which analyzes the requirements of the Program, including both the area that will be impacted (tidal waters or shoreline features) and the specific activity that is proposed. The Program is explained in Section 300.8 regulations related to "Energy Related Activities and Structures." The activities that are subject to this section are the power generation and other activities referred to above. Electric substations and transmission lines are not subject to this section of the Program.

Although each CRMC application is unique, the application generally describes the project that is proposed and addresses the specific regulatory requirements contained in the Program. The general Category B requirements for activities in tidal waters, on shoreline features and their contiguous areas contained in Section 300.1 include the following:

- Demonstrate the need for the proposed activity or alteration;
- Demonstrate that all applicable local zoning ordinances, building codes, flood hazard standards, and all safety codes, fire codes, and environmental requirements have or will be met;
- Describe the boundaries of the coastal waters and land area that are anticipated to be affected;
- Demonstrate that the alteration or activity will not result in significant impacts or erosion and/or deposition processes along the shore and in tidal waters;
- Demonstrate that the alteration or activity will not result in significant impacts on the abundance and diversity of plant and animal life;
- Demonstrate that the alteration will not unreasonably interfere with impair, or significantly impact existing public access to, or use of, tidal waters and/or the shore;
- Demonstrate that the alteration will not result in significant impacts of water circulation, flushing, turbidity, and sedimentation;
- Demonstrate that there will be no significant deterioration in the quality of the water in the immediate vicinity as defined by DEM;
- Demonstrate that the alteration or activity will not result in significant impacts to areas of historic and archaeological significance;

- Demonstrate that the alteration or activity will not result in significant conflicts with water-dependent uses and activities such as recreational boating, fishing, swimming, navigation, and commerce; and,
- Demonstrate that measures have been taken to minimize any adverse scenic impact. (See Section 330.)

There are additional requirements for other activities (e.g., filling, removing or grading of shoreline features (Section 300.2) or construction of industrial structures (Section 300.3).

Fees

The Council imposes fees on each type of application ranging from $100 for jurisdictional determinations to $1,000 for preliminary determinations. There is a sliding scale of fees for an Assent based on the estimated project cost ranging from a $50 fee for a $1,000 project to a $1,000 fee for a $100,000 project and a $100,000 fee for a $20,000,000 project. The current fee schedule is contained in Section 4.3 of the CRMC Management Procedures.

Time Frames and Schedules

The CRMC provides a thirty (30) day public notice for Category B applications and, following expiration of the notice, schedules the matter for consideration before the full Council at one of its bi-monthly meetings. Although it is difficult to provide an accurate estimate of the time required from filing to receipt of Assent, it generally takes a minimum of three months and, in a contested proceeding, can take six to twelve months. Requests for FONSIs, Category A Assents and maintenance approvals are generally processed much more quickly.

A CRMC permit is effective for three (3) years from the date of issuance and the executive director is authorized to grant a one (1) year extension for a permit.

5.2.3 SECTION 401 WATER QUALITY CERTIFICATION IN RHODE ISLAND

Certain activities (e.g., dredging and discharges to waters of the U.S.) require an applicant to obtain from the Rhode Island Department of Environmental Management (DEM) a Water Quality Certificate (WQC) which is the state approval that the project/activity in question will not violate the state Water Quality Regulations. The Rhode Island Water Quality Regulations are available at the DEM website at **http://www.state.ri.us/dem/regs.htm** and were adopted pursuant to Chapters 46-12 and 42-17.1 of the Rhode Island General Laws of 1956, as amended.

JURISDICTION

Regulatory Overview

Rule 13 of the regulations defines the activities in question to include (i) projects which may result in a discharge to waters of the state and which require a federal permit and (ii) certain projects which require approval of the CRMC.

Projects Covered

Certain National Grid companies' projects which require federal permits associated with CWA Section 404 activities or Section 10 of the Rivers and Harbors Act will trigger WQC filing, review and approval.

In particular, projects which fall under the Army Corps of Engineers (Corps) Programmatic General Permit (PGP) and require a DEM freshwater wetlands permit may be issued a permit (WQC) through the PGP process. (Refer to **http://www.nae.usace.army.mil/reg/rhdst.htm** for permitting associated with the RI PGP process.) However, for projects which require an Individual Permit from the Corps and also require a permit from the DEM, the WQC will be issued through the freshwater wetlands review process not through the PGP.

Projects in the coastal zone are required to apply for and receive a WQC directly from the DEM prior to commencement of the project even if the project falls under the Corps PGP process. Such projects include, but are not limited to, dredge and/or fill, site disturbance with potential for contributing pollutants to Waters of the State caused by land development, and any project disturbing five acres or more. (**Note:** With respect to the DEM and Coastal Resources Management Council [CRMC] jurisdiction of freshwater wetlands in coastal areas, see the section on RI freshwater wetlands with the understanding that this demarcation does not define the coastal zone, per se, but

rather the approved permitting jurisdiction for freshwater wetlands situated near the coast.)

APPLICATION PROCEDURES

Contents

The application kit associated with the Water Quality Certificate may be obtained from:

Rhode Island DEM
Office of Water Resources
Water Quality Certification Program
235 Promenade Street, Suite 260
Providence, RI 02908-5767

All applications to the Office of Water Resources (OWR) are to include:

- Site plan of the overall project (plan specifications are given in the Application Instructions and Required Enclosures of the WQC packet from the DEM);
- Project narrative detailing the scope of work and water quality implications;
- List of abutters and addresses; and
- Other DEM requested materials.

Of interest is the fact that all site plans must be prepared/stamped by a licensed or registered professional (if they are engineering plans, a PE stamp is required).

For projects involving filling of Waters of the State, the site plans must also include:

- Existing and proposed physical site conditions;
- Mean high and low water;
- Datum associated with all grades;
- Species inventory (based on an OWR approved study plan);
- Analysis of uses of the area and anticipated changes;
- Justifiable need for filling and a discussion of the alternatives that were studied;
- Proposed mitigation; and,
- Calculations of proposed volume of fill.

Review and Public Notice

The process whereby the Office of Water Resources reviews projects and initiates public notice are given in the Water Quality Regulations (EVM 112-88.97-1), Rules 13,14, and 15.

In essence for National Grid companies' projects, because of the nature of the more routine projects (wires and substations), the burdens of proof which will likely be applied are those that support the following conditions: runoff at construction sites is controlled; grades are restored; vegetation is re-established as allowed by the facilities clearance requirements; and there are no chronic erosion/sedimentation issues at the site in question. Be sure to check if the project will cross or otherwise impact any outstanding resource waters or special resource protection waters as defined in the regulations.

The director in making a decision regarding the application will determine, as part of the evaluation, if the applicant is following the *Rhode Island Soil Erosion and Sediment Control Handbook* as well as using stormwater controls, as appropriate (i.e., *State of Rhode Island Stormwater Design and Installation Standards Manual*).

Part of the director's evaluation process will involve public notice and hearing for water quality certification. The process is as follows:

- **Public Notice**: Once deemed complete, the director initiates a 30-day comment period.
- **Public Hearings**: Upon request or at the discretion of the Department, a public hearing may be held.
- **Notification to Commentors:** The director will notify all commentors of the final decision of the water quality certification review.

Effect of Approval

According to Rule 16 of the regulations:

- The issuance of an approval mandates compliance with all terms, conditions, management practices and operation and maintenance requirements stipulated in the approval. Violations may be deemed prohibited discharges.
- The issuance of an approval does not relieve any person of the continuing responsibility to comply with any applicable rule of the RI water quality regulations or applicable sections of the CWA.
- The issuance of an approval by the Department does not relieve any person of the responsibility of obtaining any other necessary permits or approvals from any federal, state, regional, or local agency.
- The issuance of an approval does not authorize any infringement of federal, state

or local law or regulations.

5.2.4 RIDEM STORM WATER MANAGEMENT

The Environmental Protection Agency (EPA) has delegated to the Rhode Island Department of Environmental Management (RIDEM) responsibility for implementing the National Pollution Discharge Elimination System (NPDES) program. The result is the adoption by RIDEM of Regulations for the Rhode Island Pollution Discharge Elimination System (RIPDES) including Regulation 31 which addresses stormwater discharges. The major National Grid activity that requires a RIPDES permit is construction activity which results in the disturbance of one or more acres of total land area. Disturbances of one to five acres are regulated as small construction activity (Rule 31(b)(16)), while disturbances of five acres or more are regulated as a discharge associated with industrial activity (Rule 31 (b)(15)(x)).

Note: RIDEM has indicated that the RI SDISM (stormwater manual) is to be amended by July 1, 2008.

JURISDICTION

Regulatory Overview

Under Rule 31 of the RIPDES Regulations, a permit is required for stormwater discharges associated with small construction activity or industrial activity.

Definitions

Rule 31(b)(16) defines “stormwater discharge associated with small construction activity” as point source discharges associated with clearing, grading and excavating. Rule 31(b)(15) defines the term “stormwater discharge associated with industrial activity” as point-source discharges from any of a number of specific activities. These activities include specific types of heavy and light industry (defined by standard industrial classification (SIC) codes) and certain other activities including mining, landfills, steam electric power generating facilities and construction activity.

To be regulated under Rule 31, a discharge (“the addition of any pollutant to waters”) must be from a point-source (“any discernible, confined, and discrete conveyance, including, but not limited to, any pipe, ditch, channel, tunnel, conduit . . .”).

Projects Covered

The major National Grid activity covered by this regulation is "construction activity" ("clearing, grading and excavation") which results in the disturbance of one acre or more of total land area.

The threshold question is whether the project involves a "point-source" discharge to waters of the state. The most common examples are runoff into a stream, river or wetland. If the stormwater will be contained entirely on the site and not flow into wetlands or other waters, the project would not be subject to the RIPDES stormwater regulations. If the runoff is by sheet flow only and does not erode thereby forming rills or other means to carry sediment to surface waters or wetlands, a RIPDES permit is not needed.

APPLICATION PROCESS

Application Requirements

There are several ways of obtaining permits for activities that are regulated under the RIPDES program. Generally, construction activity qualifies for a general permit and does not require an individual permit. An entity obtains coverage under the general permit by filing a Notice of Intent (NOI) with the RIDEM. In situations where the entity has obtained a freshwater wetlands permit from the RIDEM, a copy of the permit is attached to and filed with the NOI form. The NOI requires the development of a stormwater pollution prevention plan (SWPPP) and other documentation. Additionally, upon completion of the construction activity, a Notice of Termination (NOT) must be filed. A copy of the NOI and NOT forms and general permit are available from the RIDEM.

Fees

The current fee for a NOI is $400. The latest fee schedule should be consulted prior to filing.

Time Frame and Schedules

In situations where the applicant has a wetlands permit, construction may commence thirty (30) days after filing the NOI. Otherwise, a 90 day RIDEM review process applies.

5.2.5 RI DRINKING WATER PROTECTION

There are a number of statutes in Title 46 of the Rhode Island General Laws which provide protection for surface and groundwater which constitute the drinking water

supply in Rhode Island. Responsibility is split among the Department of Health, the Department of Environmental Management, the Rhode Island Water Resources Board and other agencies.

JURISDICTION

Regulatory Overview

The applicable statutes and their purpose are as follows:

- **Groundwater protection:** R.I.G.L. § 46-13.1-1, et seq. provides for survey and designation of groundwater classifications and development of water quality standards by the DEM. The director is authorized to promulgate well head protection rules and regulations for public water supply wells, including delineation of well head protection areas which are to be implemented by the municipalities.

- **Drilling of drinking water wells:** R.I.G.L. § 46-13.2-1 et seq. provides for the establishment of standards for the design and installation of drinking water wells; provides for the registration of drillers and installers; and requires that such individuals provide specific information to state agencies on each well which they drill.

- **Contamination of drinking water:** R.I.G.L. § 46-14-1 et seq. prohibits the contamination of water bodies (i. e. surface water) and authorizes the director of the Department of Health to order removal of "polluting matter" from the watershed.

- **Public drinking water protection:** R.I.G.L. § 46-15.3-1 et seq. imposes a water quality protection charge on sales of drinking water by suppliers; establishes water quality protection funds; and requires suppliers of public water to establish leak detection and repair programs and water quality protection plans. Section 46-15.3-14 provides that public water suppliers "shall require the installation of a back flow device after the service meter" to protect the public water supply from contamination.

Projects Covered

The two most important aspects of these programs are the establishment of groundwater protection areas by the state, cities and towns and the requirement that backflow devices be installed. The applicability of other provisions will depend on the circumstances of individual projects. The existence of groundwater or well head

protection areas can be determined by reviewing municipal zoning ordinances and maps, including applicable overlay districts or by reviewing information available through the Rhode Island Geographic Information System.

APPLICATION PROCESS

Application Requirements

The application process and the availability of any relief from the requirements of well head or aquifer protection programs will depend on the specific circumstances of the proposed project and the terms of the municipal zoning ordinance.

NATIONAL GRID RESPONSIBILITIES

Backflow Protection

National Grid has the following responsibilities for cross-connection protection devices:

- Maintain an updated and accurate survey of your facility in order to determine what cross-connections are present and whether any additional cross-connections are needed. Contact the Northborough Environmental Compliance Group for information regarding cross-connection survey vendors.
- As applicable, apply for, obtain and comply with all necessary approvals and permits from the public water system and/or the Department for the maintenance of cross-connections.
- Contact town/city for a copy of the cross-connection program. If the town does not require annual testing of permitted devices, arrange for annual testing;
- Have suitable arrangements made so that the inspections can be made during regular business hours;
- Maintain a spare parts kit and any special tools required for the removal and reassembly of the device;
- Provide the necessary labor for the inspection and testing of backflow devices by a Certified Backflow Prevention Device Tester;
- Overhaul, repair or replace within 14 days of the initial inspection date and retest if any device fails a test or is found defective;
- Submit copies of the Inspection and Maintenance Report Form as required by the public water system;
- Maintain complete records on all devices included as built plans and design data sheets and maintain the inspection and maintenance report forms for 7 years;

Wellhead or Aquifer Protection

Rule 18 of the Department of Environmental Management (DEM) Groundwater and Freshwater Wetlands Division's Rules and Regulations for Groundwater Quality require Wellhead Protection Plans to be developed to protect groundwater quality within wellhead protection areas. If there is any question whether a proposed activity at a National Grid facility that is within a wellhead protection area is compatible with the Wellhead Protection Plan, the plan should be requested from the water supplier or the DEM.

5.2.6 RI CONSTRUCTION DEWATERING

Ground or surface water withdrawals and subsequent discharges to surface are typically regulated under the Rhode Island Pollutant Discharge Elimination System (RIPDES) permitting program and may be affected by state specific wetlands legislation. These discharges may be associated with construction site dewatering activities or facility operations. The RIPDES program is designed to track point sources, monitor the discharge of pollutants from specific sources to surface waters, and requires the implementation of controls necessary to minimize the discharge of pollutants. Additionally, discharge to stormwater systems maintained by the Narragansett Bay Commission requires notification and specific work practices.

In Rhode Island, construction site dewatering of trenches or excavations subject to infiltration by uncontaminated groundwater to wetlands or surface waters may be regulated as a permitted "non-storm water" discharge under the Rhode Island Pollutant Discharge Elimination System (RIPDES) General Permit for Stormwater Discharges Associated with Construction Activities at sites where greater than one acre and less than five acres will be disturbed (see: http://www.state.ri.us/dem/pubs/regs/index.htm), "with a few specific exceptions." Refer to Section 19.0 Rhode Island Department of Environmental Management, Stormwater Management, "for specific exceptions".

Large construction projects with significant dewatering flows, sites subject to groundwater contamination, or discharges that contain other than storm water or allowable "non-storm waters" may require a site specific, individual RIPDES permit from the Rhode Island Department of Environmental Management (RIDEM). Discharges of groundwater contaminated with fuel oil or gasoline subject to remediation activities may be eligible for a RIDEM general permit (see web site noted above). However, if the potential exists that a groundwater discharge will cause or contribute to a violation of water quality standards, an individual RIPDES permit is generally required

For minor projects located on sites which are unlikely to have contaminated groundwater or soils; where no significant construction activities will take place; and where there is no reasonable potential for water quality standards to be violated, the RIDEM Office of Water Resources (telephone: 401-222-6820) should be contacted

directly to determine what if any permits would be required and/or if other administrative action on the part of the Department is appropriate.

Rhode Island Wetlands Requirements

For construction dewatering, a wetlands permit application may be required under the Rhode Island Freshwater Wetlands Act if such dewatering is likely to change the water table, alter drainage characteristics or flow patterns, or affect water quality in a wetland area. However, routine inspection, maintenance and repair activities are generally exempt from the Act for existing utility poles, structures, equipment, and/or underground lines or pipes which are necessary to provide utility services to the public (see: http://www.state.ri.us/dem/pubs/regs/index.htm). Emergency access and repair or replacement of utility lines, poles, equipment or facilities is also generally exempted. See Section 16.0, RI Freshwater Wetlands Regulations, for additional information.

Facility Operations

Facility operations which result in discharges to surface waters require permitting through RIPDES. Application for a permanent RIPDES discharge is a complex and time-consuming process. For further information regarding the permitting process, please contact the Environmental Compliance Department.

Typical Activities Regulated at National Grid Facilities

The following list includes examples of National Grid activities which may involve construction dewatering and, as a result, be subject to regulation under an NPDES permit or wetland rules:

- Any trenching, excavation or dredging for structures, equipment or transmission lines;
- Construction of foundations, support structures, etc.;
- Access road construction (associated drainage structures and other utilities);
- Manhole dewatering.

Please refer to National Grid's Environmental Procedure (EP) No. 1 Waste Management and Recycling Manual, chapter 14.0, for additional information on manhole/vault pumping procedures.

At this time, National Grid does not hold any RIPDES Permits for permanent surface water discharges in Rhode Island.

General Approach to Permit Authorization for National Grid Facilities

Prior to the initiation of construction site dewatering activities, National Grid personnel should consider the following factors to ensure compliance with the pertinent environmental regulations potentially affecting a construction dewatering project. It should be noted that even one-time dewatering flows of short duration may result in serious water quality impacts depending upon the volume and the physical, chemical, and biological characteristics of the dewatering flow. Therefore, adequate planning should be undertaken in advance of any dewatering activity in order to fully understand the nature of the dewatering flow to be generated and the associated regulatory implications.

For groundwater discharges associated with the remediation of sites contaminated with fuel or gasoline, coverage may be sought under an RIDEM general permit. In general, though, sites with groundwater or soil contamination may have significant ancillary environmental issues which should be explored fully with the RIDEM well in advance of any planned construction or dewatering activities.

If construction dewatering is of a quality or quantity likely to introduce pollutants into a receiving stream in concentrations that will result in a violation of Rhode Island water quality standards, or adversely affect a listed (or proposed to be listed) endangered or threatened species or its critical habitat, an individual NPDES permit may be required.

Therefore, prior to approaching the RIDEM, data characterizing the proposed dewatering flow and the receiving stream to be impacted by the dewatering flow should be gathered: including the volume and frequency of the discharge; the likely concentration of any pollutants known to be present in the discharge (i.e., oil and grease, total suspended solids, etc.); and any best management practices that will be employed in order to prevent or mitigate impacts to the receiving stream.

If dewatering activities do not involve utility-related routine maintenance and repair activities, and may: alter the drainage characteristics or flow patterns of wetlands or surface waters; lower the water level of a surface water or the groundwater table; or impact water quality; the RIDEM should be consulted to determine whether or not a freshwater wetlands permit application is required.

The discharge of flows other than storm water runoff to a municipal storm sewer may require the prior approval of the municipality and the submission of a permit application, including documentation that any wetlands regulations have been met and that the appropriate NPDES permit has been obtained. Please refer to National Grid's Environmental Procedure (EP) No. 1, Waste Management and Recycling Manual, section 14.2 for information regarding dewatering to the Narragansett Bay Commission stormwater system.

Private storm sewer owners may be subject to an individual or general storm water permit with specific restrictions on the type of non-storm water flows that may be released to the storm sewer. Therefore, permission should always be obtained in advance from the owner.

Considerations to Avoid Construction Dewatering Permitting

The following is offered for consideration as potential means to obviate the needed for construction dewatering permits. It is advisable to check with the appropriate permitting agency if there is any doubt as to whether a permit is required.

NDPES and state-issued construction dewatering permits involve discharges to surface waters. Those surface waters may be streams, lakes, the ocean, wetlands, etc. as well as man-made conveyances (e.g., storm drains) to those waters. If a non-contaminated discharge to those resources can be avoided, no permit is likely to be needed. Consider discharging to an upland area (i.e., through a wetland filter bag or haybale corral) where recharge to the ground will occur prior to reaching surface waters. If water from the upland discharge forms a channel and reaches the surface water/wetland, a conveyance (point source) has been created and a permit is needed. If the construction discharge is to another trench in a controlled fashion to avoid overtopping, a discharge to surface waters will be avoided and no NDPES-related permit needed.

For dewatering within the boundary of a wetland, consult with the appropriate EPA or state agency. A case can be made that if the construction dewatering discharge is designed (wetland filter bag/haybale corral) to remove sediment (a pollutant under the Clean Water Act) and if the water is not contaminated, a permit may not be required because the water is merely re-circulated and is returned to its surface water, the wetland.

5.3 NEW HAMPSHIRE WETLANDS AND WATER PROTECTION

The New Hampshire Department of Environmental Services (DES) Wetlands Bureau regulates coastal, non-tidal and inland wetlands, and submerged lands such as the Connecticut

River, ponds and lakes. Statutory authority is granted under RSA 482-A and the New Hampshire Code of Administrative Rules Chapter Wt 100-700. Regulatory program information can be accessed at: **http://www.des.state.nh.us/wetlands** and should be referenced to more completely explain the program, jurisdiction, and filings. There are several proposed rules for consideration in 2008. These include vernal pools and stream crossings. Consult the most current version of Env-Wt 100-800.

Work activities in wetlands that are regulated include: excavation, filling, dredging, or the general construction of any structure in or on a bank, flat, marsh, or swamp or waters of the State. Wetlands must be defined and delineated in accordance with the methodology developed for identifying jurisdictional wetlands under the Federal regulations. The methods for delineating wetlands are outlined in the *Corps of Engineers Wetland Delineation Manual, Technical Report Y-87-1* (1987) and the *Field Indicators for Identifying Hydric Soils in New England.*

In addition to the Wetlands Board, jurisdictional projects may be reviewed by the U.S. Army Corps of Engineers (see **http://www.nae.usace.army.mil/reg/NHPGPpermit.PDF** dealing with Corps permitting and the New Hampshire Programmatic General Permit [PGP]) and by a local Conservation Commission, if one exists.

Local Conservation Commissions organized in New Hampshire towns must receive copies of the Wetlands Bureau permit application filed for any project. Local Conservation Commissions do not have final approval or denial authority for Wetlands Bureau applications; however, they may provide comments to the Bureau on projects and their potential impacts. Permit applications must be signed by the local Town Clerk before filing. Towns/Cities can request action to be delayed for a 30-day review. Many towns have developed wetland Bylaws. Copies of these Bylaws must be obtained at the local town offices and inspected for possible local obligations under the law for work in wetlands.

5.3.1 TYPICAL ACTIVITIES REGULATED AT NATIONAL GRID FACILITIES

The following list includes examples of National Grid activities which may be located in wetlands in New Hampshire. National Grid facility activities pertinent to the New Hampshire Wetlands Rules are activities at substation, distribution and transmission facilities. Structures/activities located in the water of the Connecticut River in New Hampshire and tributaries are also subject to jurisdiction under the New Hampshire Wetlands Rules. Examples are:

- Any excavation/dredging for structures;
- Construction of foundations, support structures, etc.;

- Pole or pile installations;
- Access road construction;
- Tree clearing.

Note: River crossings for wires may need a license from the New Hampshire Public Utilities Commission. Also the Comprehensive Shoreland Protection Act (RSA 483-B) and Rules (Env-Ws 1400) protect the shorelines of select NH streams/rivers. For work within 250 feet of water bodies, check the companion chapter on the New Hampshire Comprehensive Shoreland Protection Act to see if the activities or structures are jurisdictional.

5.3.2 GENERAL APPROACH TO PERMIT AUTHORIZATION FOR NATIONAL GRID FACILITIES

Projects proposed at National Grid facilities in New Hampshire may trigger both the New Hampshire Wetlands Bureau and the Corps' wetland regulations. Corps authorization is generally not required for projects with minimum alteration to wetlands or waters. Refer to the NH PGP under the chapter on Corps filings.

The New Hampshire Wetlands Bureau classifies projects according to the type of wetland resource involved, the amount of alteration and the type of work. The requirements for application review and compliance increase according to this classification system. The classification of projects is based on these three categories - minimum, minor and major projects. The criteria for project classification listed below pertains to possible National Grid activities. These listings are not inclusive. Consult NH Code of Administrative Rules Chapter Wt 300, Part 303, Classification of Projects for categories of activities under each filing classification prior to deciding on the application type to be used.

Major Projects

Major projects shall be those that meet any one or more of the following criteria. Refer to Wt 303.02 for a complete listing and more detailed descriptions of activities.

- Projects that involve alteration of wetlands, surface waters, and banks adjacent to non-tidal surface waters in excess of 20,000 square feet in the aggregate. This criteria would apply to a new or expanded NEP ROW project involving extensive wetland alteration.
- Removal of more than 20 cubic yards of material from public waters
- Projects located in or adjacent to designated "prime wetlands" under RSA482-A:15. These are exceptional wetlands designated on state maps. These maps

should be consulted at the New Hampshire Department of Environmental Services (DES) or local Conservation Commission offices. Note: No permit shall be issued for work in prime wetlands unless evidence is provided that there shall be no net loss of [wetland] values to those areas.

- Projects which disturb more than 200 linear feet of a stream or river.
- Fill in public waters for the purpose of making land.
- Projects in a wetland that has been identified by Natural Heritage Inventory - Department of Resources and Economic Development as an exemplary natural community and/or that has documented occurrences of State or Federally listed Endangered or Threatened Species. These inventory maps must be obtained by calling the New Hampshire Wetlands Board.
- Projects which, when taken in the aggregate with previous work on the property within the last 5 years, would be considered major. For example, if previous work on the property was fill of 15,000 square feet of non-tidal wetlands and an individual applies to fill an additional 15,000 square feet of non-tidal wetlands on the property.
- Any project that is related to other applications or permits in the wetlands area or wetlands complex in a manner such that if the proposed action were considered to be in a single application the combined impact would be considered major. For example, if two individuals apply to riprap 150 linear feet of a stream that is part of the same wetlands complex.

Minor Projects

Minor projects shall be those projects that meet any of the following criteria and do not meet any of the criteria of major projects.

Refer to Wt 303.03 for a complete listing and more detailed description of activities.

- Projects that involve dredge, fill or construction of a permanent structure in a stream or marsh which do not meet the criteria of major projects;
- Removal of no more than 20 cubic yards of rocks or other materials from waters of the State;
- Projects involving less than 20,000 square feet of alteration in the aggregate in non-tidal wetlands, non-tidal surface waters, or banks adjacent to non-tidal surface waters which are not prime wetlands or designated natural areas;
- Projects that disturb between 50 and 200 linear feet, measured along the shoreline, of a lake or a pond or its banks and is not a major project;
- Repair or replacement of existing retaining walls that requires work in the water, but that results in no change in height, length, location or configuration. If a wall is to be refaced, such additional width shall not exceed 6 inches;
- Projects which disturb less than 200 linear feet of a stream or river and do not meet

the criteria for minimum projects.

Minimum Impact Projects

A minimum impact projects classification includes those which do not exceed any of the following criteria. Refer to Wt 303.04 for a complete listing and more detailed descriptions of activities.

- Temporary cofferdams and other water control devices constructed in flowing water or adjacent to dams in conjunction with the repair or maintenance of existing structures;
- Projects which alter the course of or disturb less than 50 linear feet of a seasonal stream, provided construction is done during periods of non-flow;
- Repair or replacement of existing retaining walls performed "in the dry" during drawdown of waters and which results in no change in height, length, location or configuration. If a wall is to be refaced, such additional width shall not exceed 6 inches;
- Projects involving alteration of less than 3,000 square feet in swamps or wet meadows that are not in prime wetlands or do not meet the requirements of a major project involving rare habitat, provided that no previous department permit has placed restrictions on the property of the applicant;
- Installation of a bridge provided that: (1) no work is done in the water or wetland; (2) the fill does not exceed 3,000 square feet of fill on the banks of a river or bed of the river; and (3) is not in prime wetlands, bogs, marshes, sand dunes, undisturbed tidal buffer zone or does not meet the requirements of a rare habitat restriction;
- Construction of temporary crossings of brooks, streams or rivers for the construction or maintenance of utility pipes or lines and is not in prime wetlands or within 100 feet of the highest observable tide line or does not meet the requirements of a rare habitat restriction;
- Projects located within the right-of-way of a public road that do not impact bogs, marshes, sand dunes, tidal wetlands or undisturbed tidal buffer zone, prime wetlands or does not meet the requirements of rare habitat and that do not exceed one of the following criteria:

  - Drainage structures do not exceed 3,000 square feet of dredge or fill in area.
  - Installation of a culvert that cross streams less than 10 feet wide, measured from base of bank slope to base of bank slope.
  - Wetlands that have no standing water for 10 months of the year and that do not exceed 50 feet across, measured along the roadway and the fill width measured at the base of the roadway side slopes does not exceed 50 feet.

- Shoulder widening that does not exceed 3 cubic yards of fill per linear foot in wetlands that have no standing water for 10 months of the year and does not exceed 10 feet of additional encroachment measured from base of slope.

- Maintenance dredging of non-tidal drainage ditches and plugged culverts within the original bounds of a constructed project when necessary to provide continued usefulness and projects not located in or adjacent to prime wetlands,
- Projects that alter the course of or disturb less than 50 linear feet of an intermittent stream provided construction is done during periods of non-flow,
- Repair of existing structures (partial replacement of worn, broken, or unsound parts) provided no change in location, configuration, construction type or dimension is proposed and the applicant certifies in writing that the structures have a wetlands permit and have not been abandoned for 5 years,
- Projects deemed minimum impact by DES based on the degree of environmental impact.

5.3.3 GENERAL NATIONAL GRID COMPLIANCE PROCEDURE FOR ACTIVITIES IN NH WETLANDS

The following general steps should be followed in determining whether a project requires authorization under the NH Wetland Rules. Refer to the DES wetland website for more detailed information.

Wetland Resource Delineation Authorization under the New Hampshire Wetlands Rules

Determine whether the project will be located in a wetland or water as defined in the 1987 Corps wetland delineation manual. The applicant is required to have wetland resources identified on an engineering plan along with the proposed work or activity. The level of detail provided on plans depends on the size and complexity of the project. For major or minor projects, plans must be stamped by a NH certified wetland scientist relative to the delineation of wetland boundaries.

Project Description and Design

In order to make an accurate jurisdictional determination of whether a construction project will require a permit application, an accurate project description and complete design must be developed. In making any regulatory jurisdictional determination on activities in or near wetland resources areas, the following information must be provided:

- Engineering plans indicating the general locus area and details on the size and location of the proposed structure, or structure location, or excavation or dredge

site;

- A complete but concise description of all construction methods, construction equipment and construction schedules to be used to construct or perform the proposed activity.

The New Hampshire regulations at Wt 606.12 discuss design and construction criteria for utility line poles. They include the following:

- Projects shall not endanger finfish, shellfish, crustacea, or wildlife attracted to wetland areas.

- Projects shall not significantly disturb underground or surface water flow.

- Projects shall not endanger the navigation, recreation, or commence of the general public.

Potential Project Impact and Review Alternatives to Minimize Impact

The regulations require that "major" and "minor" project involving fill, excavation, or dredging in a wetland or water resource area, must demonstrate that there are no practical alternatives which would further minimize fill or excavation of the wetland. The scope of the alternative analysis depends on the size and complexity of the proposed project.

Prepare and File Required Application

Application materials and guidelines are presented in Attachment WET-NH1. Consult the DES homepage for up-to-date information concerning wetlands jurisdiction, application materials, changes in regulations, abutter notification, and related matters at **http://www.des.state.nh.us/wetlands/**.

There is an expedited permit process for minimum impact projects. For National Grid, these may include wetland alterations of less than 3,000 sq. ft. in swamps or wet meadows or for the construction of temporary water crossings for the construction or maintenance of utility pipes or lines.

5.3.4 UNIQUE PROVISIONS IN THE WETLANDS RULES FOR UTILITY PROJECT WORK IN NH

Essentially, the only utility work that can be performed in New Hampshire wetlands that does not require an application or notification is work that does not require any excavation, filling or dredging. Maintenance activities (repair or reconstruction of an

existing legal structure) discussed at WE 303.05 do not require application or notification to the Wetlands Bureau provided they meet the following criteria:

- The size, location, configuration and construction shall remain unchanged.
- There shall be no work on any portion of the structure located in the wetland or water.
- The work shall not require the utilization of tracked or wheeled equipment in wetlands or waters.
- The structure has not been abandoned. Failure to maintain an existing structure in a state so that it is functional, and intact, for a period of 5 years shall be considered evidence of abandonment or non-use.
- Mowing or cutting of vegetation in a wet meadow, red maple swamp, hemlock swamp, spruce/fir swamp, or white pine swamp, provided that the roots of the vegetation are not disturbed, and that the ground is frozen or sufficiently dry to avoid making ruts and that the area is stabilized once thawed and that the project is not located in prime wetlands.
- Installation of a culvert in areas of limited runoff so as not to create a defined channel nor maintain wetland vegetation or soils.
- Removal of beaver dams (with conditions)
- Drilling geotechnical borings and test pitting (with conditions) except no working in bogs, marshes or tidal wetlands

5.3.5 PROCEDURE FOR NATIONAL GRID MAINTENANCE ACTIVITIES IN NH

As stated above, New Hampshire regulations only allow for utility maintenance, repair, or replacement of existing structures without a permit if the work is not an excavation or fill in wetlands or waterways. Therefore, the recommended procedure in New Hampshire is:

- Conduct a field inspection of the proposed line work with a wetland specialist and the construction supervisor. Work not located in wetlands may proceed without notification. If there is pole or tower replacements in waterways or wetlands, a permit application should be submitted to the New Hampshire Wetlands Bureau for a determination of project classification. The New Hampshire regulations at Wt 304.13 specify standards for the evaluation of "utility crossings", including:
- Crossings shall be kept to a minimum and located to minimize impact.
- The width of the impact shall be kept to that necessary for safe operation of machinery and safety or workers.
- Supplies and spoils shall not be stockpiled in wetlands.
- Swamp mats will be used when their use will reduce the impact on the wetlands.

- Projects shall not endanger navigation, recreation or commerce of the general public.
- Siltation control devices shall be used in accordance with a standard practice.
- Crossings shall be restored to natural grade, stabilized and replanted with native vegetation.

5.3.6 HAZARDOUS WASTE CLEANUP PROJECTS WHICH INVOLVE WETLANDS OR WATERS

Projects which involve the cleanup of hazardous waste located or spilled in wetlands that requires excavation or fill must obtain a permit from the Wetlands Bureau.

Hazardous spills which require immediate action in a wetland shall be conducted when a threat to public health or safety is imminent and as appropriate under New Hampshire Hazardous Waste Rules.

5.3.7 GENERAL WETLANDS BUREAU REGULATORY PROCESS

When projects involve alteration, fill, excavation or dredging in wetlands, an application must be submitted to the Wetlands Bureau and the local Conservation Commission, if it exists. The Bureau reviews the application and reviews the local Conservation Commission recommendation(s). The Bureau then determines whether to approve and apply special conditions for the project, ask for more information or a site visit, or deny the project. The following general conditions are required when conducting any fill in wetlands or waters under the Wetlands Bureau jurisdiction. Refer to Wt 304, Approval Conditions, for a complete listing.

Projects Involving Fill

- Fill shall be clean sand, gravel, rock, or other suitable material, and shall not contain material not approvable by the DES.
- Limits of fill areas shall be marked by construction fence or equivalent prior to commencement of work to assure that fill does not spill over into adjacent wetlands or surface waters.
- Slopes shall be immediately mulched or otherwise stabilized to prevent erosion into adjacent wetlands or surface waters.

Utility Crossing Projects

- Crossings of surface waters or wetlands by utilities shall be kept to a minimum and shall be located to minimize impact in accordance with Wt 302.04, Requirements for Application Evaluation.
- The width of the impact shall be kept to that necessary for safe operation of machinery and safety of workers. Supplies and spoils shall not be stockpiled in wetlands. "Spoils" means the material that is removed as the result of dredging.
- Mats shall be used when their use will reduce the impact on the wetlands.
- Projects shall not endanger navigation, recreation or commerce of the general public.
- Siltation control devices shall be used in accordance with Wt 304.06, Erosion and Siltation Control Measures, as appropriate.

- Crossings shall be restored to natural grade, stabilized and replanted with native vegetation.

Dredging Projects

- Dredge spoils shall be disposed in upland sites unless another disposal option is specifically permitted.
- Dredging in freshwater lakes, ponds, streams, brooks or rivers shall be done so as not to impede fish migrations or interfere with spawning areas for fish.
- Dredging shall not disturb contaminated layers of sediment, unless specifically identified and permitted with protection conditions.
- Appropriate controls, such as cofferdams, siltation curtains or nonporous curtains, shall be used to contain turbidity.

5.3.8 TIME FRAMES AND SCHEDULES

Under NH law, the DES Wetlands Bureau is required to act on minimum impact applications meeting all criteria for expedited review within 30 days of receiving a complete application. A written NH permit is required to validate the federal PGP, therefore work without a valid DES permit, in hand, may violate Federal law.

Other permit time frames are variable. It is recommended that whoever does the permitting follow-up with the Wetlands Bureau to monitor the permitting progress to determine if the DES has noted that the application is incomplete and needs additional detail.

5.3.9 SECTION 401 WATER QUALITY CERTIFICATION IN NH

A Section 401 Water Quality Certification is required under the federal Clean Water Act (CWA) for certain activities in wetlands and waters. This law gives the New Hampshire Department of Environmental Services, Water Division (DES Water Division) the authority to review projects that must obtain federal licenses or permits and that result in a discharge to state waters, including excavation and fill in wetlands. The purpose of Section 401 certification is to ensure that a project will comply with New Hampshire water quality standards and other appropriate requirements of state law. **Note**: National Pollution Discharge Elimination System (NPDES) permits are separate and distinct from this certification.

The regulations for water quality certification are found at NH Code of Administrative Rules Chapter Env-Ws 451 through Env-Ws 455. the DES has published (March 1995) a guidance document entitled: *401 Water Quality Certification Regulations*. For certification application materials and for specific questions regarding the program, contact Bob Baczinski (603-271-2471), the Section 401 program administrator.

Jurisdiction

Surface waters of the state refer to streams, lakes, ponds, and tidal waters within the jurisdiction of the state and include marshes, water courses, and other bodies of water either natural or artificial. Since the U.S. Army Corps of Engineers (Corps), as a federal agency with whom the National Grid companies routinely prepare water/wetland related permits, considers waters of the United States to include wetlands bordering water bodies, the Corps will require water quality certification to validate water/wetlands permits that they issue. For any project authorized for inclusion under the NH State Programmatic General Permit (NH PGP) by the Corps of Engineers, the Section 401 certificate shall be deemed to be part of the NH PGP. Refer to the Chapter describing Corps of Engineers wetlands permitting for a description of the NH PGP.

5.3.10 APPLICATION PROCEDURES IN NH

Applicant-supplied information consists of the following information:

- Name, address, responsible party (for implementation);
- Nature of the activity;
- Status and location of discharge including drainage basin and receiving water;
- Type of discharge (chemical composition, volume, frequency and temperature);
- Estimated project construction and operation period;
- A project plan/drawing/map with structures and natural resources associated with the project;

- Names and addresses of adjoining riparian or littoral owners;
- A copy of the completed federal permit application;
- A copy of applicable NH wetland permit applications and Alteration of Terrain permits. (**Note**: Based on conversation with the 401 program administrator at the DES Water Division, the DES will not do its review until a NH wetlands permit and an Alteration of Terrain permit are in hand as these form the basis for evaluation.); and,
- Certifying signature as to the true and accurate nature of the 401 application.
- Refer to http://des.nh.gov/wmb/section401.

Review and Public Notice

Be sure that the application is complete and has the required signatures. Failure to comply with these requirements will lead to rejection of the application and only result in lost time. Additional data may be requested in order for the DES to make a decision so build some additional-data-request time into your time line regarding project permitting schedules.

After noting the application is complete, the agency will require the applicant to make public notice in a newspaper having general circulation in the county where the project is located. This may be followed by notification and conduct of a public information meeting on the project if determined necessary by the DES Water Division.

After all notices and public meetings have taken place and the Water Division has the related permits to review, the 401 certificate will likely be issued within 30 days, although there is no regulatory schedule mandate regarding issuance of this certificate.

Approval Criteria

A Water Quality Certificate will be issued if the following conditions are met:

- All the 401 application requirements have been met;
- All state and/or federal permits have been obtained or shall be issued upon approval of the application by the Water Division; and,
- Construction or operation of the project will not violate state surface water quality standards;

Duration of Certificate

Certificates are valid for 6 years from the date of issuance. Re-application for certificates shall be made at least 180 days prior to expiration of the existing certificate.

5.3.11 NEW HAMPSHIRE COMPREHENSIVE SHORELAND PROTECTION ACT

Shorelands of New Hampshire are recognized as important and valuable resources and, as such, have regulatory protection. The Shoreland Protection Act authorizes the regulation of land use adjacent to the State's waters thereby maintaining State water quality standards. In 1991, the NH General Court passed the Comprehensive Shoreland Protection Act (CSPA). The Act became effective in its entirety in 1994. There are a number of changes to the Act (RSA 483-B) which became effective July 17, 2002. None effectively change the synopsis provided herein.

In essence, the CSPA establishes minimum buffer clearances between development and the borders of streams, rivers, lakes, ponds and coastal waters. The CSPA overlay zone is 250 feet; most setbacks are 50 feet. National Grid companies' projects must comply with the regulations as summarized herein. Also when repairs, improvements or expansions are proposed to existing developments, the law requires that these alterations be consistent with the intent of the CSPA.

Protected Shorelands

The CSPA is codified by RSA 483-B. Regulations are to be found at Env-Ws 1400. The protected shoreland is all the land located within 250 feet of the reference line of certain public waters. **Note**: Local regulations can be more restrictive than those imposed by the Department of Environmental Services (DES), and therefore, local bylaws/ordinances should be investigated prior to constructing near waterbodies in New Hampshire. The CSPA does not obviate the need to comply with all other applicable local, state, and federal regulations.

The reference line is determined by one of three ways for lakes and ponds:

- Natural mean high water level for natural freshwater bodies;
- Limit of flowage rights for impoundments with flowage rights;
- Full pond (spillway crest) for impoundments without flowage rights.

The reference line for rivers is the ordinary high water mark. All rivers determined to be fourth order or higher are jurisdictional. A *List of Fourth Order and Higher Streams* is presented at **http://www.des.state.nh.us/cspa**. Streams that are exempt from the CSPA are the Connecticut River, Pemigewasset River and the Saco River (G. Springs, NH DES, pers.comm. on 2/4/2000 with F.P.Richards). Those waters are regulated under the New Hampshire Rivers Management and Protection Program.

While lands within the 250 foot limit are jurisdictional, the primary building line (setback) is 50 feet from the reference line (unless lengthened or shortened by municipal rules). *50 feet is generally viewed as the limit for buildings and structures, such as transmission/distribution poles or substations* (emphasis added).

Summary fact sheets more fully describing the CSPA and the Act itself can be found at **http://www.des.state.nh.us/cspa.**

Relationship to National Grid Companies Projects

Projects located within 250 feet of a listed waterbody, whether new or maintenance/repair/ replacement, should be reviewed with the DES on a case-by-case basis. Utility projects are specifically listed at RSA 483-B:9 IV-b. The Act stipulates: A Public utility lines and associated structures and facilities shall be permitted by the commissioner as necessary, consistent with the purposes of the chapter and other state laws. As noted above, the 50-foot setback is the general standard for electric utility structures. However, since the CSPA language is vague, a check with the DES staff (see below) is highly recommended.

At RSA 483-B:9 V (a) the Act discusses natural woodland buffers. Subpart (1) states that: A Where existing, a natural woodland buffer shall be maintained within 150 feet of the reference lines. How that relates to clearings for electric facilities will need to be determined in case-by-case discussions with the DES.

The Alteration of Terrain Permit threshold drops from the standard 100,000 sq. ft. to 50,000 when it is associated with CSPA lands. (Refer to chapter 29 for discussion of that permit.)

Filings

Recent guidance by DES noted that the NH DPU compatible public utilities do not need CSPA approval; check with DES staff to confirm for each project.

The New Hampshire Rivers Management & Protection Program

The New Hampshire Rivers Management & Protection Program was established in 1988 with the passage of RSA 483 to recognize and designate rivers to be protected for their outstanding natural and cultural resource.

For a river to be designated for protection, it must be nominated to NHDES by an interested individual or organization. If NHDES approves the nomination, the Legislature and Governor must then amend the act (RSA 483). A listing of Designated

Rivers and their associated Management Plans are maintained on the NHDES Web Site at www.des.state.nh.us/rivers.

Relationship To National Grid Projects

Streams and Rivers that are located near proposed projects (within 250 feet) may be covered by the Act. The NHDES web site listing should be referenced to determine whether the stream or river is designated. If so, all work must comply to the specific river or stream's management plan.

5.3.12 STORM WATER MANAGEMENT IN NH

Alteration of Terrain (Site-Specific) Permit

The New Hampshire Department of Environmental Services (DES) Water Division regulates large projects proposing to undertake construction in or on the border of the surface waters of the state or significantly alter the characteristics of the terrain, in such a manner as to impede the natural runoff or create an unnatural runoff. This regulation applies to site-specific projects which disturb an area of 100,000 square feet or greater. Projects within Shoreland Protection zones which disturb an area of at least 50,000 square feet also require site-specific permits (RSA Chapter 485-A:17).

For land alterations meeting or exceeding the 50,000/100,000 sq. ft. thresholds, an Alteration of Terrain (AKA Site-Specific) Permit must be obtained from the DES prior to commencing such activity. This permit contains erosion control provisions that must be met during project construction. While the permit guidance also contains provisions to regulate the rate and quality of discharge from completed projects, such controls generally should not apply to National Grid wires or substation projects.

Be aware that proposed 2008 changes to the Permit include General Permit by Rule; new application requirements; updated stormwater controls; quantification of antidegradation laws; 100 year floodplain criteria; prevention and control of invasive plant species; among others.

Permit Application

The permit application and detailed plan development should be discussed with the DES Wastewater Engineering Bureau, Water Division prior to filing. The NH DES web page (**http://www.des.state.nh.us/sitespecific/**) contains useful information relative to understanding the permit issues, erosion controls, application process and fees.

Considerations for National Grid Facilities

Since most National Grid maintenance-related projects do not change contours or drainage regimes, the particulars of the application should be reviewed with the DES on a case-by-case basis to determine applicability and to minimize filing requirements to those most applicable. For a new ROW or expansion project, where contours may change or existing drainage patterns may be altered, a more detailed filing is likely to be required with supporting drainage calculations.

For substation projects, similar case-by-case discussions with the DES are in order. At substations, the minimal amount of impervious surface usually associated with such facilities, coupled with the extensive use of crushed stone, ought to limit the drainage analysis to traditional levels of detail with little, if any, post-development BMPs design and O&M considerations.

5.3.13 NH CONSTRUCTION DEWATERING

Regulatory Overview

Ground or surface water withdrawals and subsequent discharges to surface waters are typically regulated under the National Pollutant Discharge Elimination System (NPDES) Permitting Program and may be affected by State specific wetlands legislation. These discharges may be associated with construction site dewatering activities or facility operations. The NPDES program is designed to track point sources, monitor the discharge of pollutants from specific sources to surface waters, and requires the implementation of controls necessary to minimize the discharge of pollutants.

In New Hampshire, construction site dewatering of trenches or excavations subject to groundwater infiltration or storm water inflow with discharge to wetlands or surface waters is typically regulated under an NPDES General Permit for Construction Dewatering Facilities (see: **http://www.epa.gov/docs /fedrgstr/epa-water/1996/may/day-01/pr-20968.htm/**). This general permit was issued by EPA Region I on May 1, 1996 for the States of Maine, Massachusetts, and New Hampshire (61 FR 19284).

The Federal Water Quality Act of 1987 recognized that runoff from urban areas and industrial sites pollutes surface waters and required the U.S. EPA to address Stormwater discharges. EPA implemented Phase I of the Stormwater Permit Program in 1990 addressing construction activities that impact greater than five acres, certain industrial activities and municipalities with a population greater than 100,000 with separate stormwater discharges.

Phase II of the program was implemented in 1999 and addressed construction sites that impact between one and five acres and municipalities with populations between 10,000 and 100,000 that have separate stormwater discharges.

Because New Hampshire is not an authorized state, this program is administered by the U.S. EPA. Please refer to Chapter 51 for details.

Dewatering discharges to municipal or private storm sewer systems may also require the permission of the system owner and the filing of a permit application.

The state of New Hampshire also regulates groundwater withdrawals. In general, groundwater withdrawals averaging 20,000 gallons per day (averaged over a 7 day period) or any new withdrawal of more than 57,000 gallons in a 24 hour period must be registered. Refer to ENV-WS 387 for information.

Facility Operations

Facility operations which result in discharges to surface waters require permitting through NPDES. Application for a permanent NPDES discharge is a complex and time-consuming process. For further information regarding the permitting process, please contact the Environmental Compliance Department.

Typical Activities Regulated At National Grid Facilities

The following list includes examples of National Grid activities that may involve construction dewatering and as a result be subject to regulation under an NPDES permit or wetland rules:

- Any trenching, excavation or dredging for structures, equipment or transmission lines;
- Construction of foundations, support structures, etc.;
- Access road construction (associated drainage structures and other utilities);
- Manhole dewatering.

Please refer to National Grid's Environmental Procedure (EP) No. 1 Waste Management and Recycling Manual, chapter 14.0, for additional information on manhole/vault pumping procedures.

It is not anticipated that any National Grid operations or facilities will withdraw enough water to require a state registration.

At this time, National Grid does not hold any NPDES Permits for permanent surface water discharges in Massachusetts.

General Approach to Permit Authorization For National Grid Facilities

Prior to the initiation of construction site dewatering activities, National Grid personnel should consider the following factors to ensure compliance with the pertinent environmental regulations potentially affecting a construction project. It should be noted that even one-time dewatering flows of short duration may result in serious water quality impacts depending upon the volume and the physical, chemical, and biological characteristics of the dewatering flow. Therefore, adequate planning should be undertaken in advance of any dewatering activity in order to fully understand the nature of the dewatering flow to be generated and the associated regulatory implications.

Determine the overall size of the area to be disturbed.

If one acre or more will be disturbed and storm water may be a component of the construction dewatering flow, follow the procedures outlined in Chapter 51. Authorization under the General Permit for Storm Water Discharges from Construction Activities will be needed in addition to authorization under the General Permit for Construction Dewatering.

Determine if ground water or soil contamination is likely to exist on site.

For construction sites with ground water or soil contamination located in New Hampshire, Scott Pellerin at the EPA Region I (617/918-8678) will rule on whether or not a temporary exclusion from the NPDES permitting process can be issued for the dewatering activity. If such an exclusion is possible, Ambient Ground Water Quality Standards in New Hampshire must be met for surface water discharges resulting from contaminated dewatering flows.

Temporary Surface Water Discharge Permits are issued in New Hampshire for up to four months in order to facilitate short-term site remediation activities by allowing for the discharge of non-domestic wastewater to surface water as long as the water quality of the discharge meets the Department's Ambient Groundwater Quality Standards and does not cause a violation of the New Hampshire Department of Environmental Service’s (NHDES) Surface Water Quality Regulations.

Sites involving ground water or soil contamination may have significant ancillary environmental issues that should be explored fully with the NHDES well in advance of any planned construction or dewatering activities.

If no significant ground water or soil contamination is likely to exist, file a Request for General Permit Coverage with the New Hampshire DES at least 30 days prior to anticipated discharge.

The Request for General Permit Coverage must include information on the number of discharge points, and the duration, volume, and rate of the discharge. Wastewater treatment of the discharge must be described and the receiving water to be impacted by the discharge must be identified. Additionally, a topographic map showing the location of the site, latitude and longitude, SIC codes, data on storage of chemical or petroleum products, a history of the land use at the site, and basic facility and operator information must be included with the request.

Upon receiving a complete request for permit coverage, with the concurrence of the affected State, the EPA will notify National Grid within 30 days as to whether or not a dewatering discharge will be authorized under the general permit.

New Hampshire does not have a Notice of Intent/Request Form for the construction site dewatering general permit. Rather, the information detailed above must be included in a cover letter with appropriate attachments. This package should be sent to both the EPA and the New Hampshire Department of Environmental Services as follows:

State of New Hampshire
Department of Environmental Services
6 Hazen Drive, P. O. Box 95
Concord, NH 03302-0095
Attn: Construction Site Dewatering General Permit

EPA – New England, Region I
1 Congress Street, Suite 1100
Boston, MA 02114-2023
Attn: Olga Vergara

Jeff Andrews of the NHDES is the Department's storm water coordinator and can be contacted for further details at 603-271-2984 concerning the construction site dewatering general permit in New Hampshire.

If authorization for discharge under the general permit is not received, determine if an NPDES individual permit application or other action may be required.

If permit coverage is denied, the EPA will issue National Grid further instructions as to how to obtain individual permit coverage or otherwise modify its proposed dewatering activity. It is important to note that planned dewatering activities are not to be carried out at a construction site, even after the close of the 30 day review period, if such a denial is received.

Comply with the permit conditions, effluent limitations and monitoring requirements detailed in the general permit.

Monitoring of the dewatering effluent must take place on a weekly basis for flow, total suspended solids, pH, and oil & grease (certain exemptions apply, see the general permit language). The results are to be summarized monthly on a Discharge Monitoring Report (DMR) which is to be kept on-site, and must be available for inspection to the EPA or state officials. DMRs and data/documentation used to complete the DMRs should be kept on record for a period of at least three years after the report, data, or document was originally generated.

New Hampshire requires that all discharges pass through a settling basin, interceptor structures, or other approved treatment system prior to discharge. These treatment systems should be described in the request form submitted for permit coverage. New Hampshire also requires that a discharge structure be constructed if necessary to protect the bank of the affected waterbody from erosion.

If discharge of dewatering flow will be to a private or municipal storm water sewer, contact the owner and determine if specific sewer use requirements exist.

The discharge of flows other than storm water runoff to a municipal storm sewer may require the prior approval of the municipality and the submission of a permit application, including documentation that any wetlands regulations have been met and that the appropriate NPDES permit has been obtained.

Private storm sewer owners may be subject to an individual or general storm water permit with specific restrictions on the type of non-storm water flows that may be released to the storm sewer. Therefore, permission should always be obtained in advance from the owner.

When dewatering activities have concluded or when modifications or alterations to such activities are planned under the construction dewatering general permit, notify the EPA and the NH DES.

The notification should contain the name, mailing address, and location of the facility for which the notification is submitted, and the NPDES permit number that has been assigned to the discharge. For further information on notification procedures, contact the DES Wastewater Engineering Bureau (see **http://www.des.state.nh.us/phonedir.htm**).

Considerations to Avoid Dewatering Permitting

The following is offered for consideration as a potential means to obviate the needed for construction dewatering permits. It is advisable to check with the appropriate permitting agency if there is any doubt as to whether a permit is needed.

NDPES and state-issued construction dewatering permits involve discharges to surface waters. Those surface waters may be streams, lakes, the ocean, wetlands, etc. as well as man made conveyances (e.g., storm drains) to those waters. If a non-contaminated discharge to those resources can be avoided, no permit is likely to be needed. Consider discharging to an upland area (i.e., through a wetland filter bag or haybale corral) where recharge to the ground will occur prior to reaching surface waters. If water from the upland discharge forms a channel and reaches the surface water/wetland, a conveyance (point source) has been created and a permit is needed. If the construction discharge is to another trench in a controlled fashion to avoid overtopping, a discharge to surface waters will be avoided and no NDPES-related permit needed.

For dewatering within the boundary of a wetland, consult with the appropriate EPA or state agency. A case can be made that if the construction dewatering discharge is designed (wetland filter bag/haybale corral) to remove sediment (a pollutant under the Clean Water Act) and if the water is not contaminated, a permit may not be required because the water is merely re-circulated and is returned to its source water, the wetland.

5.4 VERMONT WETLANDS AND WATER PROTECTION

5.4.1 VT WETLANDS PROTECTION AND REGULATIONS

According to the Vermont Wetland Office, "The primary wetlands legislation enacted by the Vermont State Legislature is the 1986 Act Relating to the Regulation of Wetlands. The Act directed the Water Resources Board to adopt rules for the identification and protection of those wetlands that are so significant that they merit protection. The Board subsequently adopted the Vermont Wetland Rules in February 1990." Revisions to the rules were adopted in December, 2001 and became effective in January, 2002.

The Vermont Water Resources Board has posted the Wetland Rules on its web site: **http://www.vtwaterquality.org/wetlands.htm.**

Regulatory Overview

The Vermont Wetland Rules establish three classes of wetlands that are used to determine the level of protection under these rules. Class One and Two wetlands are "significant wetlands" and therefore are protected under these rules. Class Three wetlands are not protected; however, they may be protected by the Corps, and other state regulation or local planning boards.

A 50-foot buffer zone is designated and regulated contiguous to all Class Two wetlands and a 100-foot buffer zone is designated around Class One wetlands.

Protected wetlands are shown on the Vermont Significant Wetland Inventory (VSWI) maps. These maps are quite similar to National Wetlands Inventory (NWI) maps as revised to conform with these rules. Vermont wetlands rules do not apply to NWI areas labeled R20W, R2BB,R30W, R3BB, L1OW, L2OW, and L2BB. Since that mapping is rather broad scale, roughly 2-3 acres or larger wetlands depicted, smaller wetlands contiguous to these mapped wetlands are also protected as Class Two wetlands. Wetland boundaries must be field-verified. Use VSWI maps only as a starting point to begin the detailed delineation or to initiate the alternatives analysis. VSWI maps shall be updated annually.

The Wetlands Rules contain a list of approved "uses" that allow activity in wetlands. These allowed uses apply to Class One and Two designated wetlands and their buffers; however, the "uses" do not include any draining, dredging, filling, grading or alterations of the water flow. Any of these activities in wetlands require a Conditional Use Determination (CUD) from the Vermont Dept. of Environmental Conservation

(DEC). As part of the CUD process, the applicant must demonstrate that the proposed activity will not adversely impact the significant function(s) of the wetland in question. The 10 functions, not all of which apply to every wetland, for which Class One or Two wetlands have significance are as follows:

- Water storage for flood water and storm runoff;
- Surface and ground water protection;
- Fisheries habitat;
- Wildlife and migratory bird habitat;
- Hydrophytic vegetation habitat;
- Threatened and endangered species habitat;
- Education and research in natural sciences;
- Recreational value and economic benefits;
- Open space and aesthetics;
- Erosion control through binding and stabilizing the soil;

The applicant must demonstrate that adverse impacts to the wetland function(s) have been mitigated through an evaluation process that includes a series of steps, namely: avoidance, minimization, restoration, and compensation of adverse impacts. The Vermont Wetland Rules presume that the only functions that are replicable with any degree of success are stormwater retention, sediment retention, waterfowl habitat, open space and aesthetics. Compensation for other functions is problematic. A CUD may only be granted when it is shown that the proposed conditional use will not have adverse undue impacts on the significant function(s) of the wetland.

General Federal and State Wetland Permit Coordination Overview

When proposing to work in Vermont wetland resources, the activity may be regulated by the Vermont Water Resources Board and Section 404 of the Clean Water Act administered by the Army Corps of Engineers. Certain activities may be authorized by the Corps under a Programmatic General Permit (PGP) for Vermont. See the corresponding chapter on Corps of Engineers permitting for an introduction to that permitting process and conditions associated with the PGP. Also refer to **http://www.nae.usace.army.mil/reg/vtpgp.pdf**

Local Wetland Regulation

Although not mandated by the Vermont Wetland Rules, it is important to note that local planning commissions are responsible for undertaking studies, making recommendations on wetland protection and indicating those areas proposed for wetland protection in their town through land use plans. Also municipalities may adopt home rule provisions relating to wetlands. Such provisions include municipal

plans, zoning and subdivision regulations, shoreland protection bylaws, health ordinances, and flood hazard regulations.

Act 250

Large projects (greater than 10 acres) may be subject to Vermont Act 250 (Act 250), a comprehensive land use regulatory statute. The Act 250 is applicable to non-wetland National Grid projects located above an elevation of 2,500 feet, such as the NEP microwave tower stations. If National Grid projects are proposed within this context, contact the Environmental and Safety Compliance Group (ESCG) permitting specialist to identify potential environmental permits. Note: Act 250 does not regulate or control electric transmission facilities.

Application for Conditional Use Determination

Filing Process

Assuming that a permit filing is in order, the filing form is known as a Conditional Use Determination Application (CUD). Guidance for the filling out the application is given in the Department of Environmental Conservation publication entitled: Conditional Use Determination Application Handbook (May 1997). Sections 7.2 and 8.5 of the rules provide guidance as to content of the application. The original application should be sent to the:

Department of Environmental Conservation
103 South Main Street
Building 10N – Wetlands
Waterbury, VT 05671-0408

On July 1, 2002 the procedures for filing a CUD changed. The applicant must contact a District Wetlands Ecologist for a site visit and pre-application conference. Fees are now charged to process a CUD. This will be computed as follows: $50.00 flat rate plus $0.07 per square foot of wetland impact and $0.05 per square foot of buffer zone impact. Buffer zones usually are 100foot for Class One Wetlands and 50 foot for Class Two. Upon receipt of application completeness by the Department the applicant is required to distribute copies to the town offices and regional planning commissions and CUD notices are sent to adjacent landowners.

Upon receipt of written notification from the applicant verifying that the above information has been sent out, the Wetlands Office will provide, at a minimum, a 15 day notice period and opportunity for public comment. The Secretary will publish notice of the application in a local newspaper and the newspaper will bill the applicant directly for the public notice.

When the notice period has come to a close, the Wetlands Office will review all public comments, the complete CUD application and any other pertinent information related to the application. The CUD is then either approved or denied. Special conditions may be imposed or modifications to the proposed project rendered to protect the wetlands. The general timeline from the time a complete application has been accepted to the decision is usually 6 to 12 weeks.

General Water Resource Board Regulatory Considerations

If the proposed activity involves fill, excavation, dredging or alteration of Class One or Two Wetlands or their associated buffers, the Secretary may issue a Conditional Use Determination.

Factors that the Secretary will consider include a showing that the proposed conditional use will not have undue adverse impacts on the significant functions of the wetlands. For other than minimal impacts, the application must demonstrate that the applicant has considered and implemented the following mitigation principles in their proposal for work in wetlands and buffer zone:

- The proposed activity cannot practicably be located on the upland portion of the site in question or on another site owned, controlled or available to satisfy the basic project purpose;
- All practicable measures have been taken to avoid adverse impacts on protected functions;
- The proposed conditional use has been planned to minimize potential adverse impacts on the protected functions;
- A plan has been developed for the prompt restoration of any adverse impacts on protected functions.

In rare cases compensation may be allowed. Compensation is the replacement of wetland functions through the creation of new wetlands by enlarging the boundaries of existing wetlands. It is not encouraged because of the likelihood of failure. Compensation will only be considered for the following functions: water storage, nutrient retention and removal, sediment trapping, waterfowl habitat and open space, and aesthetics. Losses of other functions cannot be compensated in the view of the Wetlands Office and the Secretary. Other requirements associated with compensation include 5 years of monitoring, bonding, and a form of conservation covenant.

Time Frames for Review

Vermont Wetland Rule applications time line process as presented in the Application Handbook is as follows.

Scheduling a site visit - 2 to 3 weeks
Reviewing an application - 2 to 3 weeks
Processing an application - 6 to 12 weeks

General Conditional Use Determination

At the initiation of the Secretary, general conditional use determinations for discrete categories of conditional uses may be issued for up to 5 years (see Section 8.6 of the rules).

Reconsideration

The rules at Section 8.7 allow for requests in writing for reconsideration by the Secretary. These requests can be made by only those parties withstanding for the decision in question.

Provisions In Vermont Wetland Rules For Utility Project Work

General

As previously stated, Vermont wetland regulation incorporates a classification system that is used to determine the level of protection. Class One and Two are "significant wetlands" and designated by special nomination or a mapping system. All undesignated wetlands are Class Three wetlands. Construction at existing facilities in Class Three wetlands do not require authorization from the Secretary of the Agency of Natural Resources. This does not relieve National Grid from filing under federal or local wetlands regulations, as applicable.

The Vermont rules provide for “Allowed Uses” in Class One and Two wetlands which include the following National Grid emergency and repair and maintenance activities. Section 6.2 of the Vermont Wetlands Rules state:

- Emergency repair of utility poles and lines or maintenance, reconstruction or routine repair of structures and facilities (including but not limited to, public transportation facilities, bulkheads, docks, piers, pilings, paved areas or other buildings) in existence as of February 23, 1990, or additions to such structures or facilities which do not involve substantial expansion or modification.
- The routine repair and maintenance of utility poles and lines in a manner which minimizes impacts and is in accordance with a plan approved by the Secretary.

  Note: The repair and maintenance allowed use discusses activities done in a manner which minimizes adverse impact. This implies that some minor change

from the existing conditions could be allowed. However, the allowed use goes on to mention "in accordance with a plan approved by the Secretary". Thus, a plan must be submitted prior to initiating such repair/maintenance activity for facilities constructed after February 23, 1990.

Allowed uses do not require filings. All other uses require filing for Condition Use Determination by the Secretary.

Typical Activities Regulated at National Grid Facilities

The National Grid facilities which may be subject to the Vermont Wetland Rules include transmission and substation facilities in Vermont. Working in wetlands at these facilities may be subject to the Vermont Wetland Rules, Corps wetland jurisdiction, and possibly municipal wetlands protection. National Grid activities in Vermont which may be regulated include, but are not limited to, excavation, foundations and support structures, pole or pile installation, and access road construction.

General Approach to Permit Authorization for National Grid Facilities

A summary of the steps involved in powerline crossings of wetlands and streams in Vermont is given in the Vermont DEC Wetlands Fact Sheet #14 entitled Utility Line Crossings distributed by the Vermont Wetlands Office. The siting/review process involves Project Planning and Design relative to wetlands, Avoidance, Minimization, and Construction Conditions. These should be reviewed prior to CUD application for inclusion in the filing.

Hazardous Waste Cleanup Projects Which Involve Wetlands

There are no special provisions in the Vermont Wetland Rules that pertain to hazardous waste cleanup in wetlands. Cleanup projects are regulated like other projects that alter wetlands and coordinated through Vermont Agency of National Resources (VTANR) Hazardous Management Regulations.

Water Quality Certification

The following description of the Vermont Water Quality Certification program is based upon public information provided by the Vermont Water Quality Division, Wetlands Office. Refer to http://www.vtwaterquality.org/. Click on Permits then scroll to Water Quality Certification (401).

Under Section 401 of the Clean Water Act, States have the authority to review and approve, condition, waive, or deny water quality certification for all Federal permits or licenses that might result in a discharge to waters of the United States, including wetlands. States make their decisions on 401 Water Quality Certifications by determining whether the activity will comply with State water quality standards and other applicable laws. Federal permits and licenses cannot be granted until certification has been issued or waived by the state. Placement of fill in a wetland needing a Corps of Engineers permit would be an example of a Federal activity for which Water Quality Certification is required to validate the Federal (e.g., Corps 404) permit.

The water quality standards for Vermont include both numerical and qualitative limits/criteria. Water quality standards are comprised of two components: a criteria (numerical limit or descriptive statement of a protective limit) and a use. Both are necessary to define the specific water quality standard for given parameter. Thus the existing use or a future-stated goal for use of the water or wetland in question is protected under the water quality certification process.

The Certification Process for Wetland Impacts

The steps to determine applicability and procedure for obtaining water quality certification are outlined below:

- Determine if a federal permit of license is required;
- Determine if the area qualifies as waters (including wetlands) of the United States;
- Determine if a permit or license involves a discharge to waters of the United States;
- Determine the existing use of the water or wetland (to be discussed below);
- Determine whether there is (or will be) a significant impact on those uses.

Existing uses are determined by the Secretary of the Agency of Natural Resources on a case-by-case basis. The Secretary will consider the beneficial values and uses for the water in question as well as the following factors:

- Fish and aquatic biota in the water body;
- Wildlife that utilize the water body;
- Habitat, including wetlands, supporting fish, wildlife and plants;
- The use of a water body for recreation, fishing, water supply, or commercial activity that depends on the existing level of water quality;
- Any other evidence which demonstrates their ecological significance because of the role or importance in the functioning of the ecosystem or their rarity.

Note: The Secretary's consideration of beneficial values and uses means any value or use, **whether existing or not at the time of the application**, that is specified in the management objectives for each class of water (reference section 3-02 (A) and 3-03 (A) of the VT Water Quality Standards). This means that, on occasion, the use does not actually presently exist but is rather a goal that is expected to be attained but under which proposed discharges will be judged.

There is no application form to obtain Water Quality Certification. A letter must be sent requesting certification. Include at a minimum:

- A location map of the proposed project;
- A description of the volume, nature, and duration of the discharge;
- A site plan or sketch which clearly shows the relevant waters of the United states, including wetlands, the location of the proposed discharge, the limits of disturbance, and erosion control measures;
- Provide information sufficient to determine that any discharge will comply with the applicable provisions of the Water Quality Standards.

Note: For projects involving minor discharges, less detailed information may be acceptable.

Send the application letter and information to:

Wetlands Coordinator
Water Quality Certification
ANR/DEC Water Quality Division
103 South Main Street
Waterbury, VT 05671-0408

Standards for Approval

It is National Grid's responsibility in the application to show that the existing uses and values, and the level of water quality necessary to protect those uses and values, are maintained by the proposed project in question.

The Secretary may only approve a water quality certification when it is found that:

- The proposed activity would not have a significant impact on existing uses such as fish, wildlife and aquatic biota, among others.
- Where the existing water use involves use of the water body for recreation in and on the water, fishing, water supply, or commercial enterprises that depend directly

on the preservation of any existing level of water quality, the proposed activity would not result in significant degradation of the existing use.

Time Frame

There is a 30-day public notice associated with the review process. In general, the certification process takes a minimum of 60 days.

Appeal

The decision of the Secretary is appealable to the Water Resources Board. Any person aggrieved by a decision of the Secretary may appeal within 15 days of the decision (802-828-2871).

5.4.2 STORM WATER DISCHARGE FROM CONSTRUCTION SITES IN VT

In 1987, Congress amended the Federal Water Pollution Control Act, also known as the Clean Water Act, requiring the Environmental Protection Agency (EPA) to regulate stormwater discharges under the National Pollutant Discharge Elimination System (NPDES) permit program. In November 1990, EPA published regulations that established permit application requirements for stormwater discharges associated with industrial activity. EPA defined industrial activity in a comprehensive manner, covering a wide range of facilities in the regulatory requirements. Among the facilities included under its definition are construction activities that result in the disturbance of five or more acres of land (Phase I) and one to five access (Phase II).

As a delegated State under the NPDES program, Vermont has the responsibility to administer the permit program and issue permits for discharges within the State. Refer to http://www.vtwaterquality.org/. Click on Permits and scroll to Stormwater Construction General Permit for program-specific guidance and instructions. Applicants must submit a Notice of Intent to be covered under General Permit 3-9001- for large projects (>5 acres) and 3-9013 for small projects (>1 acre).

Coverage Under This General Permit

This proposed general permits will authorize and regulate the discharge of stormwater runoff from construction sites in the state of Vermont that result in the disturbance greater than 1 acre of land. The term disturbance includes all clearing, grading and excavation activities as well as staging areas. Parcels of land that are less than one acre in size but part of a phased or larger common plan of development or sale will need coverage under this Permit if the total area of disturbance is more than one acre.

This Permit does not cover discharges of stormwater runoff from construction activities within 50 feet of Class A waters, Outstanding Resource Waters, Class 1 Wetlands or impaired waters if construction activities could be a source.

Permit Requirements

The Permit prohibits the discharge of sediment of other waste which causes a discoloration of a receiving water. To achieve this requirement, Part III, Conditions A., B., and C. of the Permit require that an Erosion and Sediment Control Plan (Plan) be prepared and implemented prior to any clearing or site disturbance. The objective of the Plan is to prevent erosion and the transport of sediments to surface waters. Depending upon proximity of the project to sensitive receptors, the plan may require a professional engineer. The Plan must incorporate the following principles:

- Development should be designed to fit the site with disturbances on steep slopes, poorly drained soils or within 50 feet of water bodies avoided;
- Natural vegetation should be retained as much as possible and any natural drainageways should be avoided wherever possible;
- Existing streams and their reparian zones must be maintained in their natural conditions;
- The area of soil disturbance and the duration of soil disturbance should be minimized;
- Upgradient water should be prevented from entering the site and stormwater runoff generated on the site should be managed to prevent erosion; and,
- Any sediment unavoidably produced should be reduced and managed by implementing control measures.

As a minimum, the Plan must contain the following:

- Location Map: Detailing property lines, off-site streams, wetlands, ponds, etc.;
- Existing Site Condition Site Plan: Detailing property lines, topography, drainage, streams, ponds, wetlands, structures, and roads;
- Grading Plan: detailing final topography, proposed soil disturbances, and a schedule of clearing, grading, and construction;
- Erosion and Sediment Control Site Plan: Location and details of erosion and sediment control structures, schedules of seeding, mulching and other erosion control measures, and inspection and maintenance schedules;
- Narrative: Describing the above four components and any design calculations for control devices; and,
- Water Quality Monitoring: For projects discharging directly and impaired by sediment, monitoring may be required.

On-Site Coordinator Responsibilities and Select Permit Requirements

Condition III.D. of the Permit requires that an On-site Coordinator be designated. The On-site Coordinator is the person(s) directly responsible for ensuring the on-site implementation of the Plan. This person(s) shall have the authority to stop or modify construction as necessary to comply with the Plan and the Permit and is responsible for inspections and record-keeping. The On-site Coordinator does not have to be an employee of the permittee but can be any person (contractor, contractor employee, consulting engineer, etc.) associated with the construction project. The name and contact number for the on-site coordinator must be supplied to the DEC.

A copy of the Plan must be provided to the On-site Coordinator and all contractors responsible for construction activities. A copy of the Plan must be kept on-site at all times and made available upon request of the Secretary or designated representative.

The Plan must be amended if any changes occur in the project which would reduce the effectiveness of the Plan for controlling erosion or discharges of sediment or if the original Plan proves ineffective.

All control structures are to be maintained and properly operated at all times and inspected within 24 hours after a storm event which generates a discharge from a site.

Any discharge of sediment or sediment laden waters is to be immediately corrected.

Application Procedure

To obtain coverage under the General Permit 3-9001 (2002) for large projects or 3-9013 (2003) for small projects a Notice of Intent (NOI) must be completed, submitted to the Department, and an authorization to discharge from the Department received. Request filing and fee information from:

Vermont Agency of National Resources
Dept. of Environmental Conservation
Division of Water Quality
Building 10 North
103 South Main Street
Waterbury, VT 05671-0408

A copy of the NOI must also be submitted to the Municipal Clerk of the Municipality where the project is located.

The NOI must be submitted to the Department 30 days prior to the projected start date of construction. As required by the General Permit Rules, a public notice of the application for coverage under the General Permit must be sent to the clerks office of the municipality where the discharge is to occur for a 10-day public comment period. The public notice form is included as part of the NOI. Coverage under the Permit ends when the land disturbing activities are complete and the site has been stabilized or when the Permit expires, whichever occurs first.

A copy of the Erosion Prevention and Sediment Control Plan must be included with the NOI if the discharge will impact:

- Class A Waters
- Outstanding Resource Waters
- Class One Wetlands
- Waters impaired by one or more pollutants for which construction activities may be a source

Applicability to National Grid Projects

For National Grid projects which may alter more than one acre, applicability of this permit should be discussed with ANR/DEC ((802) 241-2369) on a case-by-case basis.

5.4.3 VT CONSTRUCTION DEWATERING

Ground or surface water withdrawals and subsequent discharges to surface waters are typically regulated under the National Pollution Discharge Elimination System (NPDES) Permitting Program and may be affected by State specific wetlands legislation. These discharges may be associated with construction site dewatering activities or facility operations. The NPDES program is designed to track point sources, monitor the discharge of pollutants from specific sources to surface waters, and requires the implementation of controls necessary to minimize the discharge of pollutants.

In Vermont, construction site dewatering of trenches or excavations subject to groundwater infiltration may not cause the surface water impacted by the dewatering discharge to violate state water quality standards. If the potential exists for water quality standards to be violated, National Grid may need to apply for a Vermont Pollutant Discharge Elimination System (VPDES) permit. The Vermont Department of Environmental Conservation (VDEC) must be contacted to determine whether or not a VPDES permit is required for a surface water discharge. Large construction projects with significant dewatering flows, sites subject to groundwater contamination,

or discharges that contain other than ground or storm water are likely to require a site-specific, individual VPDES permit from the VDEC.

Vermont Wetlands Requirements

For construction dewatering that takes place at a construction site, a Conditional Use Determination may be required under the Vermont Wetland Rules if such dewatering is likely to affect a defined "function" of a significant wetland. Generally, such functions may be impacted by any changes the dewatering may cause to the water table, drainage characteristics or flow patterns, or water quality in a wetland area. However, the routine maintenance and repair of utility poles and lines along with the maintenance, reconstruction, or routine repair of utility structures and facilities in existence as of February 23, 1990 are generally exempt from the Rules. Facilities constructed after February 23, 1990 may also have maintenance and repair exemptions if the VDEC has approved a plan for such work. Communication with the VDEC is necessary prior to initiating such work.

Certain conditions apply to this exemption (see **http://www.state.vt.us/wtrboard**). See Section 36.0, VT Wetlands Protection and Regulations, for further information on wetlands rules.

Vermont environmental regulations concerning wastewater discharges and wetlands can be viewed at **http://www.anr.state.vt.us/dec/regulate.htm**.

Facility Operations

Facility operations which result in discharges to surface waters require permitting through NPDES. Application for a permanent NPDES discharge is a complex and time-consuming process. For further information regarding the permitting process, please contact the Environmental Compliance Department.

Typical Activities Regulated at National Grid Facilities

The following list includes examples of National Grid activities that may involve construction dewatering and as a result be subject to regulation under a NPDES permit or wetland rules:

- Any trenching, excavation or dredging for structures, equipment or transmission lines;
- Construction of foundations, support structures, etc.;
- Access road construction (associated drainage structures and other utilities);
- Manhole dewatering.

Please refer to National Grid's Environmental Procedure (EP) No. 1, Waste Management and Recycling Manual, Chapter 14.0, for additional information on manhole/vault pumping procedures.

At this time, National Grid is a party to a permanent NPDES Permit at the Bellows Falls Substation for outfall 010. In order to comply with the permit's conditions, the following parameters must be monitored:

Parameter	Frequency	Type
Flow	Daily	Estimate
pH	Quarterly	Grab Sample
Temperature	Quarterly	Grab Sample

PG&E National Energy Group has responsibility for monitoring these parameters and submitting quarterly Discharge Monitoring Reports. Copies of these reports are submitted to the Environmental Compliance Group.

General Approach to Permit Authorization For National Grid Facilities

Prior to the initiation of construction site dewatering activities, National Grid personnel should consider the following factors to ensure compliance with the pertinent environmental regulations potentially affecting a construction project. It should be noted that even one-time dewatering flows of short duration may result in serious water quality impacts depending upon the volume and the physical, chemical, and biological characteristics of the dewatering flow. Therefore, adequate planning should be undertaken in advance of any dewatering activity in order to fully understand the nature of the dewatering flow to be generated and the associated regulatory implications.

Determine if ground water or soil contamination is likely to exist on site.

Sites involving ground water contamination or soil contamination may have significant ancillary environmental issues that should be explored fully with the Vermont DEC well in advance of any planned construction or dewatering activities.

Contact the Vermont DEC to determine if a VPDES is required.

The Wastewater Management Division (802-241-3822) of the VDEC should be contacted to assess whether or not the dewatering activities would satisfy state water quality standards, and if not, whether a VPDES permit would be required for the proposed construction dewatering discharge. Prior to contacting the VDEC, the discharge should be characterized as to the flow and the pollutants likely to be present.

This information should be given to the VDEC if requested along with other basic information, including the discharge location and the receiving water body that is to be impacted by the dewatering activities. Application forms for a VPDES permit can be obtained from the VDEC.

For construction sites in Vermont, determine if the dewatering activity is regulated under the Vermont Wetland Rules.

If dewatering activities do not involve utility-related routine maintenance and repair activities, and could: alter the drainage characteristics or flow patterns of wetlands or surface waters; lower the water level of a surface water or the ground water table; or impact water quality; the Vermont Department of Environmental Conservation, Water Quality Division (802-241-3770) should be asked to determine whether or not a Wetlands Conditional Use Determination (CUD) is required. Application forms for a CUD can be obtained from the VDEC.

If discharge of dewatering flow will be to a private or municipal storm sewer, contact the owner and determine if specific sewer use requirements exist.

The discharge of flows other than storm water runoff to a municipal storm sewer may require the prior approval of the municipality and the submission of a permit application, including documentation that any wetlands regulations have been met and that the appropriate VPDES permit has been obtained.

Private storm sewer owners may be subject to an individual or general storm water permit with specific restrictions on the type of non-storm water flows that may be released to the storm sewer. Therefore, permission should always be obtained in advance from the owner.

Considerations to Avoid Construction Dewatering Permitting

The following is offered for consideration as potential means to obviate the needed for construction dewatering permits. It is advisable to check with the appropriate permitting agency if there is any doubt as to whether a permit is needed.

NDPES and state-issued construction dewatering permits involve discharges to surface waters. Those surface waters may be streams, lakes, the ocean, wetlands, etc. as well as man-made conveyances (e.g., storm drains) to those waters. If a non-contaminated discharge to those resources can be avoided, no permit is likely to be needed. Consider discharging to an upland area (i.e., through a wetland filter bag or haybale corral) where recharge to the ground will occur prior to reaching surface waters. If water from the upland discharge forms a channel and reaches the surface water/wetland, a conveyance (point source) has been created and a permit is needed.

If the construction discharge is to another trench in a controlled fashion to avoid overtopping, a discharge to surface waters will be avoided and no NDPES-related permit needed.

For dewatering within the boundary of a wetland, consult with the appropriate EPA or state agency. A case can be made that if the construction dewatering discharge is designed (wetland filter bag/haybale corral) to remove sediment (a pollutant under the Clean Water Act) and if the water is not contaminated, a permit may not be required because the water is merely re-circulated and is returned to its source water, the wetland.

5.5 NEW YORK WETLANDS AND WATERS PROTECTION

5.5.1 FRESHWATER WETLANDS AND PROTECTED WATERS

Freshwater Wetlands

It is the public policy of New York State, as set forth in the Freshwater Wetlands Act, to preserve, protect and conserve freshwater wetlands and the benefits derived there-from, to prevent the despoliation and destruction of freshwater wetlands, and to regulate use and development of such wetlands to secure the natural benefits of wetlands, consistent with the general welfare and beneficial economic, social and agricultural development of the State (6 NYCRR Part 663).

Regulated freshwater wetland activities require a permit issued by the NYSDEC, pursuant to Article 24, or by the Adirondack Park Agency (APA; for activities within the Adirondack Park). Regulated NYSDEC wetlands are 12.4 acres or greater in size and are mapped on official NYSDEC wetlands maps. Wetlands smaller than this may be protected if they are considered of unusual local importance. A 100 foot wetland adjacent area is also regulated by the NYSDEC. Regulated APA wetlands are 1 acre or larger.

Such regulated wetland activities also require an U.S. Army Corps of Engineers (ACOE) Section 404 individual permit (for dredging or filling waters of the U.S, including Federal wetlands) or Nationwide Permit (for minor maintenance or construction). Federal wetlands have no minimum size but must meet eligibility criteria for vegetation, soils and connection to other waters of the U.S. Typically, work in the regulated adjacent area is not regulated by the ACOE.

In general, activities involving less than 0.1 acre of wetland impacts are eligible for the ACOE's Nationwide Permitting, on a self-authorized basis, as long as permit

conditions and Best Management Practices (BMPs) are adhered to (a blanket 401 Water Quality Certification is included). Activities involving from 0.1 to 0.5 acres of wetland impacts may still be eligible for ACOE Nationwide Permitting, but require a Pre-Construction Notice (PCN) to be made to the ACOE, require an individual 401 Water Quality Certification, and normally require mitigation of impacts. Activities involving greater than 0.5 acres of wetland impacts require an individual Section 404 permit and mitigation of impacts.

Tidal Wetlands

Tidal wetlands in New York State are found on the Hudson River from the Troy Dam south to the southern tip of Staten Island, and along the entire shoreline of Long Island, including the shorelines of Gardiners Island, Shelter Island and Fishers Island.

It is the public policy of New York State, as set forth in the Tidal Wetlands Act, to preserve and protect tidal wetlands, and to prevent their despoliation and destruction, giving due consideration to the reasonable economic and social development of the State (6 NYCRR Part 661).

Regulated tidal wetland activities require a permit issued by the NYSDEC, pursuant to Article 25. Regulated NYSDEC tidal wetlands include: coastal fresh marsh; intertidal marsh; coastal shoals, bars and flats; littoral zone; high marsh or salt meadow; and formerly connected tidal wetlands. In addition, adjacent areas, which are important to the protection of tidal wetlands values, adjoin these tidal wetlands zones. A 300 foot wetland adjacent area (150 feet in New York City) is also regulated by the NYSDEC. However, the regulated adjacent area extends only to the seaward edge of the closest lawfully existing (as of August 20, 1977), functional and substantial fabricated structure (including, but not limited to, paved streets and highways, railroads, bulkheads and sea walls, and rip-rap walls) which lies generally parallel to the wetland boundary. Additionally, in general, the regulated adjacent area extends only to the elevation contour of 10 feet above mean sea level, except when such contour crosses the seaward face of a bluff or cliff.

It should be noted that tidal wetlands of all sizes are regulated by the NYSDEC.

Regulated tidal wetland activities also require an U.S. Army Corps of Engineers (ACOE) permit under either Section 404 of the Clean Water Act or Section 10 of the Rivers and Harbors Act. Section 10 prohibits the obstruction or alteration of navigable waters of the United States without an ACOE permit. Many National Grid projects may be conducted under one or more Nationwide Permits (for minor maintenance or construction). Federal wetlands have no minimum size but must meet eligibility criteria for vegetation, soils and connection to other waters of the U.S.

Typically, work in the regulated adjacent area is not regulated by the ACOE.

In general, activities involving less than 0.1 acre of wetland impacts are eligible for the ACOE's Nationwide Permitting, on a self-authorized basis, as long as permit conditions and Best Management Practices (BMPs) are adhered to (a blanket 401 Water Quality Certification is included). Activities involving from 0.1 to 0.5 acres of wetland impacts may still be eligible for ACOE Nationwide Permitting, but require a Pre-Construction Notice (PCN) to be made to the ACOE, require an individual 401 Water Quality Certification, and normally require mitigation of impacts. Activities involving greater than 0.5 acres of wetland impacts require an individual Section 404 permit and mitigation of impacts.

Protected Waters

Activities that disturb the bed or banks of protected waters require a permit issued by the NYSDEC, pursuant to Article 15. A Section 401 Water Quality Certification is also required as part of this permitting process. A 401 Water Quality Certification is a NYSDEC determination that the proposed activity will not violate the New York Water Quality Standards, pursuant to 6 NYCRR Part 608. The NYSDEC may, as a result of its review, assign special conditions to ensure that water quality is protected, and environmental damage is minimized.

For work over, in, or under navigable waters of the U.S., an ACOE Section 10 (Rivers and Harbors Act) permit is required.

Coastal Zone Consistency

In New York State, the enforceable coastal policies are those in the New York State Coastal Management Program (CMP) and the enforceable policies of any Local Waterfront Revitalization Program, regional coastal management programs such as the Long Island Sound Coastal Management Program, or other special area management plan that has been incorporated into New York State's approved management program.

For projects that are either in or affecting the coastal zone and that require a Federal permit or approval, a Coastal Zone Management (CZM) consistency concurrence is required from the New York State Department of State (DOS). Coastal zone projects directly undertaken by a state agency or authority require consistency concurrence, as well, regardless of federal agency involvement.

Definitions

Regulated Activity - Means any form of draining, dredging excavation or mining, either directly or indirectly; any form of dumping or filling, either directly or

indirectly; erecting any structures, construction roads, driving pilings or placing any other obstructions whether or not changing the ebb and flow of water; any form of pollution, including but not limited to installing a septic tank, running a sewer outfall, discharging sewage treatment effluent or other liquefied wastes into or so as to drain into a wetland; or any other activity which substantially impairs any of the several functions or benefits of wetlands.

Utilities - Installing utilities in or adjacent to wetlands will be presumed to cause less damage to those wetlands if little or no additional clearing and grading is necessary. Where extensive clearing and construction of access or maintenance roads occurs, erosion and sedimentation may be the most serious problems.

NYSDEC General Permit 0-0000-01147/00001

National Grid has a General Permit with the NYSDEC that authorizes certain maintenance, restoration, reconstruction, and new, minor construction activities affecting protected waters [Class C (T) and above] and regulated freshwater wetlands and adjacent areas, in conformance with specified Best management Practices (BMP's). This General Permit requires notification of the proposed activity to the NYSDEC, no less than 45 days prior to project commencement. If no response is received from the NYSDEC, the work may proceed in accordance with the General Permit conditions and BMPs. This NYSDEC General Permit is provided on National Grid's Infonet, Environmental site.

Certain routine maintenance activities involving Adirondack Park wetlands may be eligible for a General Permit issued by the APA.

NYSDEC General Permit 1-9901-00011/00013

National Grid has a General Permit with NYSDEC – Region 1 (Nassau and Suffolk counties) that authorizes certain "…minor utility installation, repair, and maintenance activities in the adjacent areas of state regulated freshwater and tidal wetlands, and scenic/recreational rivers throughout Nassau and Suffolk counties. Examples of authorized activities include work on gas valves and regulator stations, transformers, cables, lines, pipes, utility poles and manholes, trenching and other subsurface techniques. Maintaining rights-of-way, repair of existing pavement and dewatering below 45 gpm are also included."

This General Permit requires notification of the proposed activity to the NYSDEC, no later than 14 days prior to project commencement. The notification package must include a detailed description of the project, design drawings, applicable wetlands maps, and recent project site photographs. If no response is received from the NYSDEC, the work may proceed in accordance with the General Permit conditions

and BMPs. NYSDEC General Permit 1-9901-00011/00013 is provided on National Grid's Infonet, Environmental site.

NYSDEC General Permit 2-6401-00370/00001

National Grid has a General Permit with NYSDEC – Region 2 (New York City's 5 boroughs) that authorizes "…minor utility installation, repair and maintenance activities in the Adjacent Areas only of Freshwater and Tidal Wetlands including but not limited to work on gas valves and regulator stations, transformers, cables, lines, pipes, utility poles and manholes, trenching and horizontal directional drilling. Traveling along, and maintaining rights-of-way and repair of existing pavement are also included."

This General Permit requires notification of the proposed activity to the NYSDEC, no less than 45 days prior to project commencement. The notification package must include a detailed description of the project, sesign drawings, applicable wetlands maps, and recent site photographs. If no response is received after 30 days, work is authorized to commence.

Emergency Situations Affecting Regulated Wetlands and Protected Waters

In a natural disaster, accident or other emergency situations where electric or gas facilities are damaged or threatened and must be promptly repaired, there may not be the time to follow normal permitting procedures, especially when public health and safety may be affected. Should such an event occur that impacts critical gas or electric facilities, it is fully expected that National Grid would make every effort to repair the damaged facilities, as soon as possible. Nevertheless, environmental agencies must be notified promptly and given an understanding of the situation if activities will impact regulated wetlands or protected waters.

Both the State and Federal regulations have provisions for work in wetlands and waters in emergency situations. Field operations should refer to the Natural Resource Protection EG, Chapter 2, Protected Waters, for how to deal with such emergency situations.

Major Transmission Line Construction; Article VII Projects

Pursuant to Article VII of the State of New York Public Service Law, construction of certified electric or natural gas transmission line facilities must be performed in accordance with an Environmental Management & Construction Plan (EM&CP) that is approved by the Public Service Commission (PSC).

Environmental Engineers typically assist Article VII Project Engineers by reviewing the content and quality of EM&CPs that are prepared by environmental consultants. In preparing an EM&CP, the environmental consultant performs a field site-by-site analysis, noting the locations and types of any designated state and/or federal wetlands and protected waters. This analysis also records the affected land uses, vegetative cover, age class, species density, merchantability of timber, and prescribed tree clearing and slash disposal methods.

If it is determined that construction equipment must traverse the wetland, information and recommendations regarding the type of construction equipment, the type and location of access roads and the placement of temporary swamp mats or permanent gravel installations (if required) is recorded on field maps and data sheets. Also shown on the field maps are designated "Restricted Activities Areas," designated "No Equipment Access Areas," and the proposed clearing and slash disposal types.

The EM&CP field map information, including all wetland areas one acre or larger and protected waters, is typically transferred to plan/profile aerial mosaic drawings that are included with an EM&CP filing with the PSC and, following PSC approval, are used as part of the construction bid document and specifications.

Protection measures taken into account when wetlands and protected waters are encountered include: (1) no equipment access area; (2) restricted activities areas; (3) clearing and slash disposal methods; (4) type of access through wetlands and across any streams; (5) use of appropriate erosion controls; (6) minimizing impacts to area hydrology; and (7) consultation with the Department of Environmental Conservation.

Storm Water Pollution Prevention Plans (SWPPPs)

The Federal Clean Water Act prohibits the discharge of pollutants into waterways from point sources unless the discharge is authorized by a State or Federal agency. Storm water discharges fall within these requirements for prescribed industrial activities and construction sites.

Applicability

Effective March 10, 2003, the NYSDEC requires that a Storm Water Pollution Prevention Plan (SWPPP) be prepared for any electric, gas, or general construction project with a total soil disturbance surface area of one (1) acre or more or that includes a point discharge of stormwater. Such construction activities are eligible to obtain coverage under the State's current SPDES General Permit

For such projects, National Grid is required to file Notice of Intent and Notice of Termination forms with the NYSDEC, prior to starting construction and after the completion of

construction, respectively. These projects are also required to comply with the terms and provisions of the NYSDEC General SPDES Permit for Stormwater Discharges From Construction Activities and with the project-specific SWPPP.

Definitions

Storm Water - Runoff waters from rainfall, snowmelt runoff and surface and drainage runoff.

Point Source - Means any discernible confined and discrete conveyance (i.e., pipes, ditches, channel, etc.) from which pollutants are or may be discharged.

Associated with Industrial Activity - A storm water discharge from any conveyance that is used for collecting and conveying storm water and that is directly related to manufacturing, processing or raw materials storage at an industrial location. Regulated industrial facilities are identified either by their Standard Industrial Classification (SIC) code number or by a general description in the regulation (40 CFR 122). Currently, Investment Recovery qualifies as an industrial activity location. Additionally, National Grid's electric generating stations qualify as industrial activity locations. However, these sites all possess site-specific SPDES permits.

Construction Activity - For construction sites that disturb areas greater than one acre, the operator of the construction site is responsible for obtaining a storm water discharge permit.

Responsibilities

Environmental Engineers assist Project Engineers in determining whether SWPPP requirements apply to proposed projects and, at their request, direct and review consultant-prepared SWPPPs and associated notifications to the NYSDEC. Environmental Engineers, including environmental consultants, should apply National Grid's SWPPP template/guidance document for preparing SWPPPs, to assure that National Grid's SWPPPs are similar in breadth of content (recognizing that the content needs to address NYSDEC-specific requirements).

At the request of the Project Engineer, Environmental Engineers also provide field monitoring of contractor and consultant performance, relative to SWPPP requirements.

SPDES Construction and Dewatering

Ground or surface water withdrawals and subsequent discharges to surface waters are typically regulated under the National Pollutant Discharge Elimination System (NPDES) permitting program and may be affected by state-specific wetlands legislation. These discharges may be associated with construction site dewatering activities or facility operations. The NPDES program is designed to track point sources, monitor the discharge of

pollutants from specific sources to surface waters, and requires the implementation of controls necessary to minimize the discharge of pollutants.

Requirement for a SPDES Permit

No person shall discharge or cause a discharge of any pollutant without a SPDES permit having been issued with respect to such discharge; and no person shall discharge or cause a discharge of any pollutant in a manner other than as prescribed by such permit. Therefore, both conditions must exist: 1) There is a point source discharge; and 2) the discharge potentially contains one or more pollutants.

Environmental Engineers assist Project Engineers in determining if a proposed project or activity may require a SPDES permit.

Definitions

Discharge - Means any addition of any pollutant to State waters through an outlet or point source.

Point Source - Means any discernible confined and discrete conveyance (i.e., pipes, ditches, channel, etc.) from which pollutants are or may be discharged.

Pollutant - Means dredge spoils, solid waste, incinerator residue, sewage, garbage, sewage sludge, munitions, chemical waste, biological and radioactive materials, heat, wrecked or discarded equipment, rock, sand, and industrial, municipal, and agricultural waste discharged into water. Common pollutants include chemical contaminants, such as metals and chlorine, and physical pollutants such as oil and grease and suspended solids.

Construction Dewatering

Construction site dewatering of trenches or excavations subject to groundwater infiltration may not cause the surface water impacted by the dewatering discharge to violate state water quality standards. If the potential exists for water quality standards to be violated, National Grid may need to apply for a State Pollutant Discharge Elimination System (SPDES) permit.

Environmental Engineers are responsible for assisting Project Engineers, by contacting the NYSDEC to determine whether or not a SPDES permit is required for a surface water discharge. Large construction projects with significant dewatering flows, sites subject to groundwater contamination, or discharges that contain other than ground or storm water may require a site-specific, individual SPDES permit from the NYSDEC.

Construction dewatering on Long Island (Kings, Queens, Nassau and Suffolk counties) may be subject to regulation under Article 15, Title 15 – Long Island Wells. Typically, NYSDEC LI Well permits are required for those projects utilizing “wellpoint” dewatering systems or

other types of systems used to depress or otherwise affect the local groundwater table and flows.

Environmental Engineers are responsible for assisting Project Engineers to determine whether or not a LI Well Permit is required for a dewatering operation.

Duration of the SPDES Permit

The SPDES permit is issued with a time limitation consistent with State and Federal guideline standards, and is issued for a specific duration not to exceed five years.

SPDES Permit Renewal

Any facility with ownership to a SPDES permit who intends to continue to discharge beyond the effective date of the permit must file for re-issuance of said permit at least 180 days prior to the permit's expiration date.

Discharges

a) Any discharge authorized by a permit may be subject to monitoring requirements, including the installation, use and maintenance of monitoring equipment.
b) The facility shall maintain records of all information resulting from any monitoring activities required by the SPDES permit. These records must be maintained for a minimum of three years.
c) Any results obtained pursuant to the monitoring requirements of the permit shall be reported to the NYSDEC at the end of each month (Discharge Monitoring Report), unless otherwise specified by the NYSDEC. At a minimum, the facility must provide the assisting Environmental Engineer with the results on an internal Discharge Monitoring Report, at the end of each specified sampling period.

5.6 FEDERAL WETLANDS AND WATER PROTECTION

5.6.1 U.S. ARMY CORPS OF ENGINEERS

The Federal government regulates fill and dredging in wetlands and waterways under two statutes and regulations. Section 404 of the Clean Water Act regulates discharges of fill and dredge material in wetlands and waterways. Section 10 of the Rivers and Harbors Act of 1899 regulates the placement of structures and dredging in navigable waters of the U.S. Section 404 and Section 10 are both administered by the Army Corps of Engineers with EPA administrative and/or permit review. Generally, these regulations are triggered by construction or dredging activities in jurisdictional

waters. Construction activities related to repair and maintenance, expansion of existing structures or new structures may require permitting.

The New England District of the Army Corps of Engineers is responsible for the states of Connecticut, Maine, Massachusetts, New Hampshire, Rhode Island, and Vermont. For information relative to the New England District, access their web site at: **http://www.nae.usace.army.mil.**

Projects in New York State may fall under one or more of the following Army Corps of Engineers Districts: Baltimore, Buffalo, New York, Philadelphia or Pittsburgh. To determine the appropriate ACOE district, access the Army Corps of Engineers web site at: **http://www.usace.army.mil.**

(Note: Information on Programmatic General Permits may be dated; check the expiration date on the web version prior to use).

Section 404 Dredge and Fill In Wetlands And Waters

Jurisdiction over activities in wetlands as defined in Section 404 of the Clean Water Act is interpreted by both the Army Corps of Engineers and the EPA. The Corps administers the regulations implementing Section 404. The resources regulated are termed "Waters of the United States" which are defined as:

All waters which are currently used, or were used in the past, or may be susceptible to use in interstate or foreign commerce, including all waters which are subject to the ebb and flow of the tide.

All interstate waters including interstate wetlands.

All other waters such as intrastate lakes, rivers, streams (including intermittent streams), mudflats, sandflats, wetlands, sloughs, prairie potholes, wet meadows, playa lakes or natural ponds, the use, degradation or destruction of which could affect interstate or foreign commerce.

When conducting activities in "Waters of the U.S.", there are two jurisdictional questions that must be answered to determine authorization requirements: (1) Is the water body where the proposed discharge or dredge activity will take place within the geographic jurisdiction of Section 404 (i.e., waters of the U.S.); and (2) Is the type of activity within the scope of Section 404?

Rivers and Harbors Act of 1899

Section 10 regulates the geographical location defined in the statute as "navigable waters."

Navigable waters of the United States are those waters subject to the ebb and flow of the tide and/or are presently used, or have been used in the past, or may be susceptible for use to transport interstate or foreign commerce. A determination of navigability, once made, applies laterally over the entire surface of the water body, and is not extinguished by later actions or events which impede or destroy navigable capacity."

Types of Wetland Resources Regulated

The Corps regulations define the term "wetlands" as:

"Those areas that are inundated or saturated by surface or ground water at a frequency and duration sufficient to support, and that under normal circumstances do support, a prevalence of vegetation typically adapted for life in saturated soil conditions. Wetlands generally include swamps, marshes, bogs and similar areas."

Unlike some State wetland regulatory programs, federal wetlands are not distinguished by resource definition or classification. Wetlands must be defined according to the 1987 Federal Manual for Delineating Jurisdictional Wetlands. This manual outlines certain vegetative, soil and hydrologic criteria which indicate the presence of wetland characteristics. Wetlands should be determined by a qualified wetland specialist and documented on "Corps Forms" which will ultimately become part of the Corps filing. Please note: as used herein the term Section 10/404" refers to any activity that is Corps jurisdictional.

Activities Regulated At National Grid Facilities

Section 10/404 regulates fill and dredge activities at National Grid coastal and inland transmission, distribution, generation and substation facilities. With the exclusion of activities located in buffer zones or Adjacent Areas, as applicable, the activities regulated under the State programs are also regulated under Section 10/404 including:

- Construction or enlargement of access roads in wetlands;
- Excavation and dewatering;
- Foundations, support structures or buildings;
- Poles or piles;
- Fences if in wetlands or waters;
- Placement of riprap, soil or any fill;
- Cleanup of hazardous material spills in wetland resources;

- Building or repairing bulkheads, cofferdams and other structures in wetlands or surface water bodies;
- Mechanized land clearing, ditching, channelization and other excavation activities that destroy or degrade waters of the U.S., including wetlands;
- Wires strung over navigable waters; and,
- Cables or pipelines located on or in the bottom of navigable waters.

An Environmental Engineer should be consulted to determine what activities are regulated and whether Section 10/404 may apply.

Special Case National Grid Activities

There are activities proposed from time to time which do not fall into easily recognized categories of regulated activity that may or may not be jurisdictional. These are "gray area" projects which take careful jurisdictional consideration. Examples of activities that may not require a Section 10/404 permit include:

- Any incidental addition, including redeposits of dredge material associated with any activity that otherwise does not have or would not have the effect of destroying or degrading an area of waters of the United States, provided that any person or persons, prior to commencing an excavation activity involving a discharge demonstrates to the satisfaction of the Corps, that the activity would not have the effect of destroying or degrading waters of the United States.
- Incidental movement of dredged material occurring during dredging for navigation in navigable waters of the United States, provided the dredging is either authorized by Congress and/or the Corps pursuant to Section 10 of the Rivers and Harbors Act of 1899. This exception is not applicable to dredging activities in navigable waters of the United States that are wetlands.
- Use of swamp mats for temporary construction access in wetlands will not be considered a discharge of fill material or as secondary impacts for the purpose of determining the applicable category for state-specific Programmatic General Permits (PGPs; see below). However, the use of swamp mats may be required as a special condition of a PGP authorization to minimize aquatic impacts. The Corps has stated that: heavy equipment working in wetlands shall be avoided if possible, and if required shall be placed on mats to minimize soil and vegetation disturbance.
- Activities that involve only the cutting or removing of vegetation above the ground (e.g., mowing, rotary cutting and chain sawing) where the activity neither substantially disturbs the root system nor involves mechanized

pushing, dragging or other similar activities that redeposit excavated soil material.

Impacts to wetlands and waters associated with the above-mentioned incidental discharges will be assessed on a case-by-case basis. It is the responsibility of any persons preparing to undertake an excavation or fill activity to demonstrate to the satisfaction of the Corps that the activity would not have the effect of destroying or degrading waters of the United States.

Please note that the PGP's for Massachusetts, Vermont and New Hampshire each contain procedures to be followed in the event of an "emergency". Refer to the specific PGP for notification, filing, and approval processes.

Repair and Maintenance

Repair and maintenance work as defined by the Corps in the state-specific PGPs (NH excepted) relates to repair or maintenance of existing currently serviceable, previously authorized structures and fills with no expansion or change in use. Replacement structures must be on the same fill as the original structure. Changes in structure type, if wholly within the footprint of an authorized fill and without change in use, are allowed. New fills for structures or anchors require filing.

Placement Of Pilings That Require A Section 10/404 Permit

The placement of pilings in waters of the United States in a manner that the pilings and supported structure would have the effect of a discharge of fill material requires a 404 permit. Note: Any new pilings that are placed in navigable waters of the United States, as defined in 33 CFR Part 329, require authorization under Section 10 of the Rivers and Harbors act of 1899 (see also 33 CFR Part 322). Examples of such activities include:

- Projects where pilings are so closely spaced that sediment accumulates at higher rates;
- Projects where the pilings themselves effectively replace the bottom elevation of a water body or wetland;
- Projects involving the placement of pilings that would reduce or impair the flow or circulation of waters of the United States;
- Projects involving the placement of pilings which would result in the adverse alteration or elimination of aquatic functions.

Section 404 Regulatory/Permitting Process

Section 404 provides the regulatory background and process for project activities. Generally, the regulatory/permitting process has been modified by the Corps through Public Notice (August 24, 1993) to coordinate review with state wetland regulatory programs and minimize Corps review of projects with minimal impacts to coastal and inland waters. Currently, the Corps has issued Programmatic General Permits (PGPs) for Massachusetts, New Hampshire, Vermont and Rhode Island. PGPs have replaced the Nationwide Permits Program (NWPs) in New England but not in New York. NWP's cannot be used in lieu of PGPs. The stated intent of the PGPs and NWP's is to streamline permitting. Individual permits are required for large projects and involve public notification as well as extended review.

The general steps to the federal wetland regulatory process are as follows:

- Determine the geographical areas of jurisdiction, i.e., the presence and extent of water bodies and wetlands involved in the project. This can be ascertained by an environmental or wetlands scientist.
- Define in detail the amount of dredge or fill involved in the project, and define all alternatives considered to minimize filling or dredging in wetlands. This should involve design or field engineers and construction experts working on the project.
- Determine the scope of the project with respect to the level of review by the Corps based on the State-specific Programmatic General Permits or Nationwide Permit thresholds.

Programmatic General Permits (PGP)

The Corps of Engineers has issued a PGP for each New England State in the National Grid companies service area. These are specialized General Permits that are tailored to be consistent with each State's specific wetlands regulations. These include Massachusetts, Vermont, New Hampshire, and Rhode Island. Each State is slightly different with regards to thresholds, reporting requirements, etc. since the PGPs are based on different state wetland regulations. The various New England State-specific PGPs in the National Grid companies' service areas are given in: **http://www.nae.usace.army.mil/reg/index.htm**.

Guidance for PGP review is based on a letter from the Corps dated January 3, 2000:

"The general permits shall not be used for piecemeal work and shall be applied to single and complete projects. All components of a single project shall be treated together as constituting one single and complete project and/or all planned phases of a multi-phased project. This does not apply to linear projects such as power lines and pipelines, with multiple, separate, and distinct waterway or wetland crossings where each crossing may be reviewed for PGP Category I eligibility. If any crossing requires Category II review, then the entire linear project shall be reviewed as one project under Category II. The general permit shall not be used for any activity that is part of an overall project for which an individual permit is required."

The following is an abbreviated summary of the PGP program for each State in National Grid's New England service area. It is highly recommended to schedule a pre-application meeting with the Corps to discuss future projects. Early guidance from the Corps may assist in designing a project that requires a reduced level of permitting effort.

Massachusetts

The current Massachusetts PGP was issued on January 11, 2000, amended on June 30, 2003, and will expire on January 11, 2005. The Massachusetts PGP identifies three levels of review, including Category I or non-reporting projects, Category II or project screening, or projects not eligible for PGP authorization, requiring an individual permit. Refer to **http://www.nae.usace.army.mil/reg/mapgp.pdf**.

MA Category 1 (Non-Reporting)

Work in Massachusetts that is subject to Corps jurisdiction, that meets the definition of Category 1, and that meets all of this permit's other conditions may proceed without application or notification to the Corps provided all other required Federal, state and local authorizations are obtained. Activities that qualify for Category 1 authorization include:

- Projects with less than 5,000 square feet of inland wetland fill and secondary impacts (excluding vernal pools, saltmarsh, mudflats, riffles and pools, and vegetated shallows);
- In stream work limited to low flow period (July 1 – Oct.1);
- Bank stabilization less than 500 linear feet with and average of 1 cubic yard of fill per linear foot below ordinary high water, and no wetland fill;
- Repair or maintenance of existing, currently serviceable, authorized fills with no expansion or change in use;

- Maintenance dredging of less than 1,000 cubic yards with upland disposal and no impact to special aquatic sites in navigable waters of the U.S.;
- Scientific measurement devices and survey activity (no fill for roads or construction pads).

Fills and discharges associated with dams, dikes, stream crossings, water withdrawals or diversion fills are not eligible for Category 1.

General permit review thresholds and requirements concerning Water Quality Certification (WQC) and Coastal Zone Management (CZM) consistency apply even if no Massachusetts Wetlands Protection Act (WPA) filing is required.

Although Category 1 projects are non-reporting, the Corps reserves the right to require review for an individual permit if there are sufficient concerns for the aquatic environment or any other factor of overriding public interest. Also the applicant must comply with the National Historic preservation Act, Endangered Species Act, and the Wild and Scenic Rivers Act. Furthermore if there is a high likelihood of cultural/historical resources, consultation with the MA Historical Commission or appropriate Indian Tribes (see section VI of the MA PGP).

MA Category 2 (Screening)

The Corps and other Federal resource agencies (U.S. Environmental Protection Agency, U.S. Fish and Wildlife Service, and National Marine Fisheries Service) and MA Coastal Zone Management program staff will screen projects that exceed the non-reporting thresholds for a case-by-case determination of applicability under this general permit. Activities that require screening by the federal agencies include:

- New fill discharges in wetlands, waterways including secondary impacts of 5,000 square feet to 1 acre;
- Temporary fill and excavations up to 1 acre in special aquatic sites;
- Bank stabilization greater than 500 linear feet with and/or greater than 1 cubic yard of fill per linear foot below ordinary high water, or any amount with fill in wetlands;
- Replacement or repair of any non-serviceable structure and fills up to expansion to 1 acre, or with a change in use;
- Maintenance dredging greater than 1,000 cubic yards and new dredging up to 25,000 cubic yards with Corps approved disposal and no impact to special aquatic sites;
- Structures or work in or affecting tidal or navigable waters including utility lines, aerial crossings, and transmission lines, pipelines or outfalls.

Screened projects may not proceed until written notification is received from the Corps and the applicant receives the applicable approvals or waivers concerning water quality certification and coastal zone management consistency.

Applicants must apply to the Corp using ENG Form 4345 or alternatively an application filed with the DEP for a Water Quality Certificate. The filing must also include information provided to DEP relative to alternative analysis. Information typically required for Category 2 filings is outlined in the MA PGP.

If a project requires filing a Notice of Intent (NOI) with the local Conservation Commission, a copy should be submitted to the Corps at the same time.

Since the Corps will also need documentation from the State Historic Preservation Office (SHPO) that there is no impact to registered historical properties or known archaeological sites, a letter from the project manager to the SHPO should be included in the filing package to the Corps for Category 2 Authorizations. Separate notification has been expanded to include the Wampanoagan, Stockbridge – Munsee, and Narragansett Indian Tribal Historic Preservation Officers. The PGP notes their respective geographic areas of concern in Massachusetts.

MA Individual Permit

Work in the Individual Permit category, or, activities that do not meet the terms and conditions of the general permit, require an application for an Individual Permit from the Corps (33 CFR Section 325. 1). The screening procedures outlined above in Category II will only serve to delay project review in such cases. The applicant should submit the appropriate application materials at the earliest possible date. Projects that typically require an Individual Permit include:

- New temporary or permanent fill discharges in wetlands, waterways including secondary impacts in excess of 1 acre;
- An EIS is required by the Corps;
- Temporary fill and excavations greater than 1 acre in special aquatic sites;
- Replacement or repair of any non-serviceable structure and fills greater than 1 acre;
- Maintenance dredging of any amount within a special aquatic site and greater than 25,000 cubic yards of new dredging or any amount in or affecting special aquatic sites.

Rhode Island

The Rhode Island PGP identifies three levels of review, including Category 1 (non-reporting), Category 2 (reporting and screening), or projects not eligible for PGP authorization, requiring an individual permit.

Other approvals required to validate a Rhode Island PGP authorization for a National Grid companies project may include:

- Rhode Island Department of Environmental Management (RIDEM) approval under the Freshwater Wetland Act, Rhode Island General Laws;
- RIDEM approval under the Water Quality Regulations for Water Pollution Control pursuant to RIGL Chapter 42-17.1 and Section 46-12-1 *et seq*.;
- Coastal Resources Management Council (CRMC) approval under RIGL Chapter 23, Section 46-23-1 *et seq*.

Applicants are also required to notify the Corps if any federally threatened or endangered listed species or critical habitat is in the vicinity of the project. Information on the location of protected species and their habitats can be obtained from the U.S. Fish and Wildlife Service (FWS) and National Marine Fisheries Service (NMFS). Refer to: **http://www.nae.usace.army.mil/reg/index.htm**.

Project proponents may be required to determine if the project will affect Essential Fish Habitat (EFH). Information on location of EFH can be obtained from the NMFS.

In the December, 2002 amendment, the Corps acknowledged the boundaries of the Narragansett Indian Reservation (Land Claim Settlement Area) and limits of jurisdiction. They also re-emphasized consultation with the RI Historical Preservation and Heritage Commission as well as the Narragansett and Wanepsanoag tribes.

Lastly, the definition of Single and Complete Projects with respect to linear projects (e.g., power lines) applies to each crossing of a separate water of the U.S. at that location.

RI Category 1 (Non-Reporting)

Work in Rhode Island subject to Corps authorization may proceed without application or notification provided all other required Federal, state and local authorizations are obtained and if the work meets the Category I definitions listed in Appendix A of the Rhode Island PGP. These definitions include, in part:

For inland waters and wetlands:

- Less than 5,000 sq. ft. of fill and secondary impacts;
- Repair or maintenance of existing, currently serviceable, authorized fills with no expansion or change in use;
- Surveying;
- No creosote treated structures to be used.

For tidal and navigable waters:

- No new fill discharges;
- Repair or maintenance of existing and currently serviceable structures or fills that were previously authorized with no change in use;
- Maintenance dredging of less than 1,000 cubic yards with upland disposal;
- No pile supported structures or floats over submerged aquatic vegetation or tidal wetlands;
- Survey activities such as exploratory drilling, surveying or sampling that does not disrupt movement of aquatic organisms. Note: survey activities does not include fill for temporary roads or construction pads;
- No creosote treated structures to be used.

RIDEM has granted Water Quality Certification and CRMC has granted coastal zone consistency for Category 1 activities.

Note that activities that are subject to Corps jurisdiction but are exempt from state regulation are not eligible for authorization under Category 1 even if they meet the Category 2 threshold.

RI Category 2 (Reporting and Screening)

The Corps and other Federal resource agencies (U.S. Environmental Protection Agency, U.S. Fish and Wildlife Service, and National Marine Fisheries Service) will screen projects that exceed the non-reporting thresholds for a case-by-case determination of applicability under this general permit. Activities eligible for Category 2 authorization are considered minimal impact projects and must meet definitions of Category 2 listed in Appendix A of the Rhode Island PGP and the conditions of the PGP. Definitions of a Category 2 project include, in part:

For inland waters and wetlands:

- 5,000 sq. ft. to one acre fill and secondary impacts;
- Replacement of non-serviceable fills, expansion of serviceable fills up to one acre, repair or replacement of fill with a change in use;
- Inland water or wetland restoration projects;
- No creosote treated structures to be used.

For tidal and navigable waters:

- New fill discharges in wetlands, waterways including secondary impacts up to 1 acre;
- Temporary salt marsh impacts up to 1 acre;
- Repair of any non-serviceable structure and fills up to 1 acre or change in use;
- Maintenance dredging greater than 1,000 cubic yards and new dredging up to 10,000 cubic yards with upland disposal and no impact to special aquatic sites;
- Structures or work in or affecting tidal or navigable waters that are not defined under any other headings. Includes but is not limited to utility lines, aerial and transmission lines, pipelines or outfalls;
- No creosote treated structures to be used.

An application must be submitted directly to the Corps for activities that are exempt from state jurisdiction.

Application for state regulated activities must be submitted to the appropriate state agency. There is no need to apply separately to the Corps. The state resource agency and the Corps will coordinate their review and will notify the applicant in writing if the project is not eligible for Category 2 authorization prior to issuance of any state approvals. The Corps will coordinate with the Rhode Island Historic Preservation and Heritage Commission to assure the project complies with Section 106 of the National Historic Preservation Act. The applicant does not need to contact the state historic office directly.

RIDEM has issued conditional Water Quality Certification for Category 2 projects provided the applicant obtains other necessary State approvals and the RIDEM finds the project is reasonably likely to have minimal or no impact on water quality. CRMC has issued coastal zone consistency for projects that meet the conditions and definitions of Category 2 projects.

RI Individual Permit

Projects that do not meet the conditions or definitions of the RI PGP Category 1 or Category 2 require an individual permit. Specific definitions listed in Appendix A of the RI PGP that require an Individual Permit include:

For inland waters and wetlands:

- Greater than one acre fill and secondary impacts;
- Replacement of non-serviceable fills, replacement of serviceable fills with expansion over one acre;
- No creosote treated structures to be used.

For tidal and navigable waters:

- New fills and discharges greater than 1 acre within waterways and wetlands including secondary impacts;
- Temporary salt marsh fills or excavations over 1 acre;
- Permanent fill of any amount within special aquatic sites;
- Replacement of non-serviceable structures or fills;
- Repair and maintenance of serviceable fills with expansion greater than 1 acre;
- Maintenance dredging of any amount affecting a special aquatic site;
- New dredging greater than 10,000 cubic yards, and all dredging with open water disposal;
- No creosote treated structures to be used.

Application for an Individual Permit must be made directly to the Corps in accordance with 33 CFR Section 325.1. Individual Water Quality Certification and Coastal Zone Consistency concurrence is required from the appropriate state agencies.

Note: Vernal pool protection has been incorporated into the PGP. National Grid takes issue with the upland buffers associated with these habitats. Encroachments into the buffers must be dealt with at this time on a case by case basis.

Vermont

The current Vermont PGP was issued on October 15, 2002, amended on December 27, 2002 and will expire on October 15, 2007. The Vermont PGP identifies three levels of review, including Category A or non-reporting, Category B, or reporting and not eligible for authorization under the PGP, requiring an individual permit.

Other approvals needed to validate a Vermont PGP authorization for a National Grid Companies project may include among others:

- Vermont Department of Environmental Conservation (VT DEC) approval of a Conditional Use Determination under the Vermont Wetland Rules;
- VT DEC Water Quality Certificate;
- VT DEC approval of a Stream Alteration Permit under Title 10, Chapter 41, Subchapter 2;
- VT DEC approval of a Lake Encroachment Permit under Title 29, Chapter 11, Management of Lakes and Ponds;
- VT Department of Fish and Wildlife (VT F&W) approval of a Stream Obstruction Permit under Title 10, Chapter 111, Section 4607.

Applicants are also required to notify the Corps if any federally threatened or endangered listed species or critical habitat is in the vicinity of the project. Information on the location of protected species and their habitats can be obtained from the U.S. Fish and Wildlife Service. Refer to **http://www.nae.usace.army.mil/reg/vtpgp.pdf**.

In all cases to ensure compliance with this PGP, consultation should occur with the VT Division of Historic Preservation.

VT Category A (Non-Reporting)

Work on projects eligible for Category A authorization may proceed without application or notification provided all other required Federal, State and local approvals are obtained and the work meets the PGP conditions and Category A definitions listed in Appendix A of the PGP. These definitions of eligible projects include but are not limited to:

- Less than 3,000 square feet of waterway, wetland and secondary impacts, including all temporary and permanent discharges;
- No impact to special aquatic sites;
- In-stream work limited to July 15 to October 1;
- Fills and discharges associated with dams, dikes, stream crossings, water withdrawals or diversion fills are not eligible for Category A;
- No non-reporting fills are allowed in the towns of Athens, Brookline, Grafton, Newfane, Putney, Springfield, Rockingham, or Townshend;
- Bank stabilization less than 500 linear feet with and average of 1 cubic yard of fill per linear foot below ordinary high water, and no wetland fill, except certain specified rivers;
- Repair or maintenance of existing, currently serviceable, authorized fills with no expansion or change in use provided no impact to special aquatic sites;
- Oil spill clean-up discharges;
- Survey activities such as exploratory drilling, surveying or sampling. Note: survey activities does not include fill for temporary roads or construction pads.

The VT DEC has granted Water Quality Certification for activities described as eligible for Category A, provided other applicable state permits and approvals are obtained. Stream crossings at locations with drainage areas of one square mile or greater must have written approval from VT DEC or greater than 15 days of receipt of complete crossing information by VT DEC.

VT Category B (Reporting and Screening)

Projects that exceed the Category A or non-reporting thresholds will be screened by the Corps and other Federal resource agencies (U.S. Environmental Protection Agency, U.S. Fish and Wildlife Service, and National Marine Fisheries Service) for a case-by-case determination of applicability under this general permit. Activities eligible for Category B authorization are considered minimal impact projects and must meet definitions of Category B listed in Appendix A of the Vermont PGP and the conditions of the PGP. Definitions of a Category B project include, in part:

- New fill discharges in wetlands, waterways including secondary impacts and all temporary fills greater than 3,000 square feet and less than 1 acre in area;
- Stream crossings as noted in Appendix A of the PGP;
- New fill or discharges up to 1 acre in special wetlands or within the towns of Athens, Brookline, Grafton, Newfane, Putney, Rockingham, Springfield or Townshend;
- Dams dikes stream crossings, water withdrawals or diversion fills and any fills in special wetlands;
- Bank stabilization projects greater than 500 feet long and/or greater than 1 cubic yard per linear foot below ordinary high water, and any work along certain rivers listed in the PGP;
- Repair of any non-serviceable structure, expansion of serviceable fills up to 1 acre or change in use;
- Utility line crossings, including directional bores or overhead;
- Dredging up to 5,000 cubic yards with upland disposal and no impacts to special aquatic sites.

Application for a Vermont PGP Category B authorization must be made directly to the Corps Vermont Field Office in Colchester, VT. The State resource agency and the Corps will coordinate their review and will notify the applicant in writing within 25 days of the coordination meeting if the project is <u>not</u> eligible for the VT PGP Category B authorization.

The VT DEC has issued conditional certification that Category B activities are in compliance with Vermont Water Quality Standards. The VT DEC reserves the right to require an individual Water Quality Certificate for any Category B activity.

A copy of the application materials must be submitted to the Vermont Division for Historic Preservation for review for the presence of historic/archaeological resources in the permit area that may be affected by the proposed work. A copy of the cover

letter to the Vermont Division for Historic Preservation should be included with the application to the Corps.

VT Individual Permit

Projects that do not meet the conditions or definitions of the VT PGP Category A or Category B require an Individual Permit. Specific definitions listed in Appendix A of the VT PGP that require an individual permit include:

- New fills and discharges greater than 1 acre within waterways and wetlands including secondary impacts and temporary or permanent fills;
- Repair and maintenance of serviceable and non-serviceable fills with expansion greater than 1 acre;
- Any project where and EIS is required by the Corps;
- Maintenance dredging of any amount affecting a special aquatic site;
- New or maintenance dredging greater than 5,000 cubic yards;
- Dredging with open water disposal.

Application for an Individual Permit must be made directly to the Corps in accordance with 33 CFR Section 325.1. Individual Water Quality Certification is required from the appropriate State agency.

New Hampshire

The current New Hampshire PGP was issued on June 2, 2002 and will expire on June 2, 2007. The New Hampshire PGP identifies three levels of review similar to the New Hampshire Wetland Rules Part WT 100-800, including "Minimum Impact Projects" or non-reporting, "Minor Impact Projects" or reporting and screening, and "Major Impact Projects" that are not eligible for authorization under the PGP, requiring an Individual Permit. Projects with impacts up to 3 acres may be considered for authorization under the NH PGP.

Other approvals needed to validate a New Hampshire PGP authorization for a National Grid Companies project may include authorization by the New Hampshire Wetlands Bureau.

NH Department of Environmental Services has granted Water Quality Certification for projects that are authorized by the NH PGP.

Applicants are also required to notify the Corps if any federally threatened or endangered listed species or critical habitat is in the vicinity of the project. Information on the location of protected species and their habitats can be obtained

from the U.S. Fish and Wildlife Service and National Marine Fisheries Service. Refer to: **http://www.nae.usace.army.mil/reg/NHPGPpermit.PDF**.

Essential Fish Habitat (EFH) was included in the 2002 revision of the NH PGP as were vernal pools. Impacts to vernal pools are to be filed under the Minor or Major project category as applicable.

NH Minimum Impact Project (Non-Reporting)

Work on projects classified as Minimum Impact Projects may proceed without application or notification of the Corps, provided all other required Federal, state and local approvals are obtained and the work meets the PGP conditions and Minimum Impact Project criteria included in the PGP. Eligible projects include:

- Activities that meet the State of New Hampshire definition of a Minimum Impact Project;
- The project impacts less than 3,000 square feet of wetlands and waterways, including secondary impacts and temporary discharges;
- An approval is received by the NH Wetlands Bureau, and all required federal and non-federal licenses or licenses;
- Meets the permit conditions for avoidance and minimization of impacts;
- Activities in Section 10 waters that are not regulated by the Wetlands Bureau, formerly authorized under the Nationwide Permit Program and listed in Appendix A of the NH PGP.

The following activities are not eligible as Minimum Impact Projects:

- Work in Special Aquatic Sites (see NH PGP);
- Waters of the U.S. functioning as vernal pools;
- Wetland restoration projects;
- Reconstruction or replacement of currently unserviceable structures/fills.

NH Minor Impact Project (Reporting and Screening)

Projects that exceed the Minimum Impact Project or non-reporting thresholds will be screened by the Corps and other Federal resource agencies (U.S. Environmental Protection Agency, U.S. Fish and Wildlife Service, and National Marine Fisheries Service) and New Hampshire's Coastal Zone Management (NH CZM) staff for a case-by-case determination of applicability under this general permit. Activities eligible as a Minor Impact Project include:

- The project must meet state of New Hampshire definition of Minor Impact Project;
- The project must have received approval from the NH Wetlands Bureau;
- Must have received all other necessary required federal, state and local permits and licenses;
- Must meet all of this permit's conditions, including avoidance and minimization.

Application for a New Hampshire PGP Minor Impact Project authorization is made by filing two State permit applications (one labeled "Corps of Engineers") with the NH Wetlands Bureau. The project may proceed after 30 days from the date of the Wetlands Bureau authorization, unless the Corps issues written notification for additional information or requires an individual permit.

NH Major Impact Project (Reporting and Screening)

Projects that exceed the Minor Impact Project thresholds will be screened by the Corps and other Federal resource agencies (U.S. Environmental Protection Agency, U.S. Fish and Wildlife Service, and National Marine Fisheries Service) and NH CZM for a case-by-case determination of applicability under this general permit. Major Impact Projects eligible for NH PGP authorization include:

- The project must meet state of New Hampshire definition of Major Impact Project and involve less than 3 acres of waterway or wetland impact including secondary fills;
- The project must have received approval from the NH Wetlands Bureau;
- Must have received all other necessary required Federal, state and local permits and licenses;
- Must meet all of this permit’s conditions, including avoidance and minimization.

Application for a NH PGP Major Impact Project authorization is made by filing two state permit applications (one labeled "Corps of Engineers") with the NH Wetlands Bureau. The project may proceed upon receipt of written notification from the Corps. The Corps will notify the applicant within 30 days of the date of the Wetlands Bureau authorization of either authorization under the NH PGP or the need for an individual permit.

A copy of the application materials for minor and major impact projects must be submitted to the New Hampshire State Historic Preservation Officer (SHPO) for review for the presence of historic/archaeological resources in the permit area that

may be affected by the proposed work. A copy of the cover letter to the New Hampshire SHPO should be included with the application to the Corps.

NH Individual Permit

Projects that do not meet the conditions or definitions of the NH PGP Minimum Impact Project, Minor Impact Project or Major Impact Project that impacts greater than 3 acres of wetlands or waterways require an individual permit. Most projects for work which involve impacts over 1 acre will require an individual permit.

Application for an individual permit must be made directly to the Corps in accordance with 33 CFR Section 325.1. Individual Water Quality Certification and concurrence with Coastal Zone Consistency is required from the appropriate state agencies.

Emergency Situations (Major and Minor Impact Projects)

Emergency situations are limited to sudden, unexpected occurrences that could potentially result in an unacceptable hazard to life, a significant loss of property, or an immediate, unforeseen, and significant economic hardship if corrective action requiring a permit is not undertaken within a time period less than the normal time needed to process an application under standard procedures.

If an emergency situation requires action in less than 30 days after the occurrence, it qualifies for the amended notification procedures described in the NH PGP. The Corps will make this determination.

5.6.2 NPDES STORM WATER PROGRAM

The National Pollution Discharge Elimination System (NPDES) Permitting Program is designed to track point sources, monitor the discharge of pollutants from specific sources to surface waters, and requires the implementation of controls necessary to minimize the discharge of pollutants. Initial efforts to improve water quality under the NPDES program primarily focused on reducing pollutants in industrial process wastewater and discharges from municipal sewage treatment plants. However, as pollution control measures for these sources were implemented and refined, studies showed that more diffuse sources of water pollution were also significant causes of water quality impairment, specifically storm water runoff draining large surface areas, such as agricultural and urban lands. Up to date information regarding the program can be obtained at: **http://www.epa.gov/owm/sw.**

In 1987, the Clean Water Act (CWA) was amended by Congress to require implementation of a comprehensive national program for addressing problematic non-

agricultural sources of storm water discharges. As required by the amended CWA, the NPDES Storm Water Program is being implemented in two phases:

- Phase I of the NPDES Storm Water Program deals with medium and large municipal separate storm sewer systems (MS4s serving populations of 100,000 or more people) and construction activities that disturb 5 or more acres of land; and
- Phase II deals with certain regulated small MS4s (i.e., urbanized areas) and construction activity that disturbs between 1 and 5 acres of land.

Phase I of the NPDES Storm Water Program

In response to the 1987 Amendments to the CWA, EPA developed Phase I of the NPDES Storm Water Program in 1990. Phase I requires the NPDES permits for storm water discharges from, among other activities, eleven categories of industrial activity, one of which is construction activity that disturbs five or more acres of land. Regulations are given in Federal Register (FR), Vol. 63, No. 61:7858-8014.

Permit coverage is under a general NPDES permit. EPA issues the NPDES storm water permits in Massachusetts and New Hampshire. In Rhode Island and Vermont, the DEM and DEC, respectively, administer the NPDES program and issue storm water management permits. In New York State, the DEC administers the program through it's SPDES program and has issued general stormwater permits for construction and industrial activities.

Note:

1. Massachusetts has its own distinct storm water management program. However, special permit conditions detailed at FR Vol. 63, No. 31:7914 for the NPDES program in Massachusetts tie the State and federal programs together requiring compliance with the provisions of the Massachusetts Wetlands Protection Act storm water management guidelines.

2. New Hampshire regulates storm water under its Alteration of Terrain (aka Site-Specific) permit process.

Phase II of the NPDES Storm Water Program

Phase II of the NPDES Storm Water Program was enacted in 1999. Phase II requires the NPDES permit coverage - mostly under general permits - from storm water discharges from construction activity disturbing between 1 and 5 acres of land.

Regulatory Activities and Permitting

Phase I regulates construction activity (defined at FR Vol. 63, No. 31:7861 as clearing, grading and excavation) that results in the disturbance of five or more acres of total land area, including smaller areas that are part of a larger common plan of development.

National Grid facilities discharging to storm sewers (i.e., headquarters, district offices and stores) may eventually become regulated under Phase II.

The National Grid companies must obtain coverage, as applicable, under an NPDES storm water permit and implement storm water pollution prevention plans or storm water management programs (using BMPs) that effectively reduce or prevent the discharge of pollutants into receiving waters.

For Massachusetts and New Hampshire, where EPA is the permitting authority, Construction General Permits are issued. For Rhode Island and Vermont the respective state agency will dictate the type of permit which is applicable and filing requirements. Refer to chapters dealing with storm water management in those states.

In Massachusetts and New Hampshire where EPA's Construction General permit applies, the National Grid companies must comply with the following requirements in order to obtain coverage:

- A Notice of Intent (NOI) must be completed and submitted to EPA's NOI Processing Center (address identified on the NOI form (Note: Signing and submitting the NOI form obligates the permittee to comply with the terms of the Construction General permit.) Once the NOI is received, it will be posted on the EPA's web site for 7 days. Please note that NOI's submitted electronically are automatically posted. NOI's submitted in hard copy must be administratively processed, potentially resulting in a delay of several days to weeks before the NOI is posted. Commencement of **any** earth-disturbing construction activity must not begin until the 7 day posting expires.
- Permittees may contact the NOI Processing Center at (301) 495-4145 to determine the status of a particular NOI. EPA's NOI requires certification that the industrial activity will not impact endangered or threatened species protected under the Endangered Species Act. This certification is unique to EPA's NOI and is not a requirement of most NPDES-delegated States NOI's.
- A Storm Water Pollution Prevention Plan (SWPPP) must be developed and implemented in accordance with the Construction General Permit *prior to submitting the Notice of Intent.*
- The National Grid companies' applicant can submit a Notice of Termination (address identified on the NOT form) when:

1. Disturbed soils at the construction site have finally been stabilized and temporary erosion and sediment control measures have been removed (or will be removed at an appropriate time);

2. Storm water discharges have been eliminated; or

3. The permittee is no longer an operator of the site.

Note: Blank copies of the Notice of Intent and Notice of Termination are given at: **http://www.epa.gov/owm/sw/construction/connoi.pdf.**

New York State has issued General Stormwater permits for construction and industrial activities. Coverage under one of the applicable permits is obtained by filing a Notice of Intent (NOI). Prior to filing an NOI, a site-specific Storm Water Pollution Prevention Plan (SWPPP) needs to be prepared for each project for which coverage is to be obtained. Information on the General Permits can be accessed from the NYSDEC web site at**: http://www.dec.ny.gov.**

Storm Water Pollution Prevention Plan (SWPPP)

The contents of the SWPPP is given at FR Vol. 63, No. 31:7907. In summary, the Plan is to contain a: 1) Site Description (nature of construction, construction sequence, estimate of disturbance, runoff estimates, location map, names of receiving waters/wetlands, permit requirements of the project, and whether threatened or endangered species are involved); 2) Controls (determine and install applicable BMPs); 3) Maintenance (assurance of maintenance of BMPs); and 4) Inspections (at least once every 14 days and within 24 hours of a storm event of 0.5 inches or greater or once every 7 days).

In general, the documentation that the National Grid companies prepare for wetland and waterways permitting will go a long way toward satisfying the SWPPP requirements. This statement assumes that erosion controls are the only form of formal storm water BMPs needed for the project. If a National Grid facility has been designed or is required to incorporate long term soil stabilization via structural features (e.g., retention ponds), then more information is required for the SWPPP (see FR Vol. 63, No. 31:7907). Additional requirements for facilities in Massachusetts are given at FR Vol. 63, No. 31:7914 which basically ties the federal and state storm water programs together.

Relationship to Transmission and Substation Facilities

The FR rulemaking mentions electric facilities at FR Vol. 63, No. 31:7865 and 7877. At these citations it is noted that such projects need a permit or should be reviewed to determine applicability of these regulations.

The FR Vol. 64, No. 235; 68772, however, clarifies when construction, such as for our substation and wires project activities trigger NPDES permitting. A NPDES permit can only be required if a construction site has a point source discharge. A point source discharge means that pollutants are added to waters of the United States through a discernible, confined, discrete conveyance. 'Sheet flow' runoff from a small construction site would not result in a point source discharge unless and until it is channelized.

Erosion gullies, etc. can be considered a channelized discharge for stormwater and cause a project to be subject to permitting under NPDES or state programs. Therefore, properly working erosion controls are critical to controlling these discharges and precluding NPDES permitting when justified as noted above.

5.6.3 NPDES CONSTRUCTION DEWATERING

Ground or surface water withdrawals and subsequent discharges to surface waters resulting from construction site dewatering activities are typically regulated under the National Pollutant Discharge Elimination System (NPDES) permitting program and may be affected by state specific wetlands legislation. The NPDES program is designed to track point sources, monitor the discharge of pollutants from specific sources to surface waters, and requires the implementation of controls necessary to minimize the discharge of pollutants.

Typical Activities Regulated At National Grid Facilities

The following list includes examples of National Grid activities that may involve construction dewatering and as a result be subject to regulation under a NPDES permit or wetland rules:

- Any trenching, excavation or dredging for structures, equipment or transmission lines;
- Construction of foundations, support structures, etc.;
- Access road construction (associated drainage structures and other utilities);
- Manhole dewatering.

Please refer to National Grid's Environmental Procedure (EP) No. 1 Waste Management and Recycling Manual, chapter 14.0, for additional information on manhole/vault pumping procedures.

5.7 GENERAL APPROACH TO PERMIT AUTHORIZATION FOR NATIONAL GRID FACILITIES

NPDES permitting requirements for construction dewatering discharges to wetlands or surface waters vary state by state and are addressed in the sections below.

5.7.1 MASSACHUSETTS

In Massachusetts construction site dewatering of trenches or excavations subject to groundwater infiltration or storm water inflow with discharge to wetlands or surface waters is typically regulated under a NPDES General Permit for Construction Dewatering Facilities. This general permit was issued by EPA Region I on May 1, 1996 for the States of Maine, Massachusetts, and New Hampshire (61 FR 19284). See Section 7.0, Construction Dewatering – Massachusetts, for details.

5.7.2 NEW HAMPSHIRE

In New Hampshire construction site dewatering of trenches or excavations subject to groundwater infiltration or storm water inflow with discharge to wetlands or surface waters is typically regulated under a NPDES General Permit for Construction Dewatering Facilities. This general permit was issued by EPA Region I on May 1, 1996 for the States of Maine, Massachusetts, and New Hampshire (61 FR 19284). See Section 30.0, Construction Dewatering – New Hampshire for details.

5.7.3 VERMONT

In Vermont, construction site dewatering of trenches or excavations subject to groundwater infiltration may not cause the receiving water impacted by the dewatering discharge to violate state water quality standards. If the potential exists for water quality standards to be violated, National Grid may need to apply for a Vermont Pollutant Discharge Elimination System (VPDES) permit. The Vermont Department of Environmental Conservation (VDEC) must be contacted to determine whether or not a VPDES permit is required for a surface water discharge. Large construction

projects with significant dewatering flows, sites subject to groundwater contamination, or discharges that contain other than ground or storm water are likely to require a site specific, individual VPDES permit from the VDEC. See Section 39.0, Construction Dewatering - Vermont, for details.

5.7.4 RHODE ISLAND

In Rhode Island, construction site dewatering of trenches or excavations subject to infiltration by uncontaminated groundwater may be regulated as a permitted "non-storm water" under the Rhode Island Pollutant Discharge Elimination System (RIPDES) General Permit for Storm Water Discharges Associated with Construction Activities (reissued in March, 1998) at sites where equal to or greater than five acres will be disturbed or, beginning in the year 2003 (see below), at sites equal to or greater than one acre. Large construction projects with significant dewatering flows, sites subject to groundwater contamination, or discharges that contain other than storm water or allowable "non-storm waters" may require a site specific, individual NPDES permit from the Rhode Island Department of Environmental Management (RIDEM). See Section 22.0, Construction Dewatering – Rhode Island, for details.

6. ROW ACCESS, MAINTENANCE AND CONSTRUCTION BEST MANAGEMENT PRACTICES

Many of National Grid's rights-of-way and associated facilities are located in or near to environmentally sensitive areas, such as wetlands, streams, and other protected natural resources. In order to help protect these natural resources, Environmental Engineers are responsible for assisting Project Engineers and field operations with understanding and applying National Grid's environmental Best Management Practices (BMPs) for work on electric and natural gas transmission and distribution rights-of-way.

The ROW Access, Maintenance and Construction BMPs are provided in Chapter 3 of the Natural Resource Protection EG. Project Engineers, field operations, and contractors are to follow this EG in planning and performing work on rights-of-way. These BMPs address right-of-way access, construction along ROWs, structures in wetlands, clean-up and restoration standards, gates and security on rights-of-way, field refueling and maintenance operations, management of spills and releases, construction best practices, notification of emergencies, and typical BMP drawings for right-of-way access, wetland and stream crossings, and erosion controls.

6.1 RIGHT-OF-WAY (ROW) ACCESS

Whenever possible, access should be gained along existing access routes within the ROW. However, in some cases there are no existing access routes and other means of access, such as off-ROW access, are required. In many cases, temporary access can be utilized. The following practices provide general guidance on accessing a ROW. Check with an Environmental Engineer to determine if any environmental permitting is required before utilizing a temporary access. Real Estate Assets Management should also be contacted if off-ROW access is needed.

Access to ROWs from Public Roads
A suitable (~15-foot wide by 50-foot long) crushed stone ramp, placed on geotextile fabric, should be installed at the intersection of the ROW and public roads and streets, at those locations where equipment could track mud onto the public street. Once work is complete, the crushed stone and geotextile fabric should either be removed or retained, depending upon future maintenance-related access needs; if removed, the area shall be graded, seeded (if adequate root and seed stock are absent) and mulched.

Maintenance of Existing Access Road and Routes
In many cases, the existing access road may need to be improved to allow passage of the heavy equipment needed for scheduled maintenance work. Minor improvements may include adding gravel fill or crushed stone to fill depressions and washed-out areas. Major

reconstruction projects may require permits. In all cases, the fill to be used should be clean and free of construction debris. Use of processed gravel, including reprocessed concrete (crushed concrete), may be approved by the field supervisor or Environmental Engineer, on a case-by-case basis.

Maintenance of Existing Access Routes
Ruts and depressions along existing access routes and within the existing ROW can be leveled and graded, only.

Maintenance of Existing Gravel Roads
Existing gravel roads can be restored or maintained at their pre-existing width and elevation, with clean gravel or crushed stone.

Maintenance of Existing Culverts
Damaged culverts can only be replaced after checking with an Environmental Engineer. Care must be taken to protect adjacent wetlands and watercourses by installing straw bales or filtration material around the downstream end of the culvert. If at the time of anticipated replacement, there is heavy flow through the culvert, the Person in Charge should consult with the Environmental Engineer, to verify whether the culvert should be replaced at that time.

Access When Roads Are Not Available

If existing roads are not available, access via other methods described below should be explored.

Upland Access

- Off ROW or other upland access should be used, if available. (Check with Real Estate Asset Management and an Environmental Engineer.)

Low Bearing Pressure or Track Vehicles

- In some cases, access through shallow wetlands can be achieved with the use of Low Bearing Pressure or Tracked Vehicles. Use of this technique requires approval from the Company Environmental Engineer (not all states allow this technique).

Frozen or Dry Conditions

- If schedules can accommodate deferral of wetland access until frozen or dry conditions, use of swamp mats or other mitigation measures may be avoided. It should be determined beforehand if the regulatory authority in question accepts this alternative.

Swamp Mats

- In some cases, access through wet areas may require the installation of swamp mats, especially in the case of stream crossings. In MA and NH, if the work to be performed meets the definition of maintenance under state and federal regulations, the swamp mats must be placed in the locations where they had been placed during previous work in order to qualify for the maintenance exemption. Please note that not all state regulatory agencies have a maintenance exemption.

Other Methods

- Where the number of trips, nature of loads and work are suitable, the project Engineer may determine that helicopter use is justified.

Stream Crossings

- Stream crossings should be bridged with swamp mats or other temporary minimally-intrusive measures unless fording is acceptable for the site and is authorized by the Environmental Engineer or Analyst. Care should be taken when installing a swamp mat bridge to insure that the banks are not damaged during installation and removal and that stream flow is not unduly restricted. An environmental permit may be required to cross or disturb protected waters, depending upon state-specific regulatory requirements.

6.2 CONSTRUCTION ALONG ROWs

During construction activities, efforts should be made to minimize impacts to the environment. Therefore, keep to a minimum the amount of ground cover and soil disturbed, and store materials needed for the project in upland areas. Utilize erosion and sediment controls such as straw bales or siltation fencing, to limit the impacts from soil erosion.

Siltation and Erosion Controls

- Siltation and erosion control devices shall be installed in accordance with permit conditions and/or regulatory approvals, and otherwise in order to prevent negative impacts to environmentally sensitive areas. In most cases, the installation of staked bales of straw (for use in sensitive areas where invasive plant species are of concern), placed between the work area and sensitive area, is all that is required to minimize impacts from soil erosion. If the ground is frozen, it may not be possible to stake the bales of straw. In those cases the Person in Charge should consult with an Environmental Engineer. Another control is the installation of siltation fencing in place of or in addition to the staked bales of straw. Wood Chip bales are also available in NE; consult the Environmental Engineer. Whenever erosion and siltation controls are installed, they must be regularly inspected and maintained until the site is completely restored and vegetation is established (to at least 80% cover).

Site Grading

- The work site shall not be graded unless absolutely necessary to complete the work at the site. Grading outside of a regulated area shall be kept to the minimum extent necessary for safe and efficient operations. The Work Site shall be promptly re-graded, re-seeded (if adequate root and seed stock are absent), and mulched with straw (for use in sensitive areas where invasive plant species are of concern) to reduce erosion and visual impact, as soon as possible following completion of work at the site. Grading within a regulated area shall be subject to the review and approval of the Person in Charge, Project Engineer or Environmental Engineer.

Top Soil

- When the Work Site requires excavation and grading, the top soil shall be stockpiled separately from the material excavated and this top soil shall be spread as a top dressing over the disturbed area, during restoration of the site.

Rocks

- In active agricultural areas, rocks that were brought to the ground surface as a result of the work should be removed from the site, dependent upon consultation with the farmer.

Construction Material Along ROW

- Prior to start of construction, material such as poles arms and insulators may be placed along the ROW as part of the project. Place construction material out of wetlands or other sensitive resource areas unless authorized by the Environmental Engineer or Environmental Consultant.
- As soon as the structure work has been completed, all used parts and trash are to be picked up and removed from the ROW. Retired poles and structures should be removed or cut 18 inches below the ground surface and backfilled to grade. In some cases, the used material from structure work may be temporarily stored at the work area by placing it out of the wetlands or other sensitive resource area until work in the adjacent areas has been completed. If work is discontinued for an extended period, all material must be removed from the ROW. Contact the Environmental Engineer for guidance on whether the work site must be restored.

6.3 STRUCTURES IN WETLANDS

Access to structures should be obtained utilizing existing, improved or gravel roads whenever present. However, in some cases, there are no existing gravel access routes, and other means of access to structures are required, as discussed below.

Structures with Gravel Pads

- Many electric power line structures built in wetlands were constructed with gravel pads. A gravel pad is a deposit of fill material, generally gravel, that was placed in the wetland to support the structure. In most cases, the area around the structure was filled to a distance of 15 to 20 feet beyond the structure. This provided room for the construction crew to install and maintain the structures. In most cases, if the structure was built with a gravel pad, there would also be a gravel access road out to it.

Structures without Gravel Pads (Deep Wetlands)

- In those cases where the structure is in a deep wetland without a pad, the structure was generally constructed on piles. In deep wetlands (generally greater than 7 feet) a pile would be driven down through the wetland into the hard material below the wetland. A pile would be driven for each leg of the structure. With the piles in place, the structure legs would be attached to the pile and erected on top. At those locations where piles were used, the wetland was generally too deep to construct a gravel access road.
- Access to structures without access roads will be on swamp mats or similar weight-distributing materials. In a deep wetland, timber mats may have to be piled 3 or 4 high to support the construction equipment above the wetland surface.

Structures without Gravel Pads (Shallow Wetlands)

- There are cases where structures were built in a wetland and not on piles. This case would be a shallow wetland with a hard bottom. The wetland will probably be one or two feet deep. In this case there may or may not be an access road out to it. Access for maintenance of the structure will be by driving through the wetland on the hard bottom, under frozen or completely dry conditions such that there is no rutting, or by installing swamp mats or similar weight-distributing bedding. The use of low-bearing or tracked vehicles may also be appropriate. The method of access will depend on the time of year and the weather conditions. The Person in Charge should consult with the Environmental Engineer if he or she has any questions on what to use.

6.4 CLEAN-UP AND RESTORATION STANDARDS

The following steps should be taken after construction has been completed. Refer to the Order of Conditions or other applicable Permit Requirements if issued for the project in question, to determine if the site must be reviewed prior to removal of erosion controls.

Disturbed Areas

- Unless otherwise specified in permits below, all disturbed areas, including wetlands and access routes, shall be returned to original grade, seeded with a

Conservation Seed Mix (if adequate root and seed stock are absent), and mulched with straw (for use in sensitive areas where invasive plant species are of concern).

Improved Areas

- Yards, lawns, agricultural areas, and other improved areas shall be returned to a condition at least equal to that which existed at the start of the project. Alternately, if requested, the property owner may be reimbursed to perform their own restoration, after the site has been left in an environmentally sound manner. If this option is requested, it should be documented in a written release signed by the property owner.

Access Routes (Cross Country Routes)

- Cross country access routes shall be returned to pre-construction grade, seeded (if adequate root and seed stock are absent) and mulched.

Access Roads (Constructed Gravel Roads)

- Constructed gravel roads shall be returned to a condition at least equal to that which existed at the start of the project except that gravel roads shall, at a minimum, be serviceable for four-wheel drive vehicles. Seeding and/or mulching of gravel roads is generally not appropriate nor required.

Property Damage

- All damage to property occurring as a result of a project shall be immediately repaired or replaced. In some locations, it may be desirable to document preexisting damage prior to the project in order to demonstrate afterwards that the damage did not result from the project.

Swamp Mats/Temporary Structures

- After all work is completed, swamp mats and temporary bridges shall be removed and the site restored to pre-construction conditions.

Siltation Controls

- After all work has been satisfactorily completed and vegetation has been re-established, and upon approval by the Person in Charge or the Environmental Engineer, siltation fence and stakes from straw bales shall be removed, and the strings on the bales cut in accordance with any pertinent Order of Conditions or similar permit requirements. Straw bales which were used for sedimentation or siltation control may be used to mulch disturbed areas (straw should be used in areas where invasive plant species are of concern). Remaining straw bales that do not block the flow of water may be left in place. Straw bales that block the flow of water must be removed. Siltation fence and straw bale stakes shall be disposed of properly, off-site.

Stonewalls

- Removal or alteration of stonewalls shall be avoided whenever possible. Any stonewall removed or breached by construction activities shall be repaired or rebuilt. Rebuilt stone walls shall be placed on the same alignment that existed prior to temporary removal.

Work Site

- Upon satisfactory completion of work, the construction personnel shall remove all work-related trailers, buildings, rubbish, waste soil, temporary structures, and unused materials belonging to them or used under their direction during construction, or waste materials from previous construction and maintenance operations. All areas shall be left clean and restored to a stable condition and where feasible, as near as possible to its original condition.

Material Storage/Staging Areas

- Upon completion of all work, all material storage yards and staging areas shall be completely cleared of all waste and debris. Unless otherwise directed or unless other arrangements have been made with an off right-of-way land owner, material storage yards and staging areas shall be returned to the condition that existed prior to the installation of the material storage yard or staging area. Whether or not arrangements have been made with a landowner, all areas shall be left in an environmentally sound condition. Also any temporary structures erected by the construction personnel, including fences, shall be removed by the construction personnel and the area restored as near as possible to its original condition, including possibly seeding and mulching.

6.5 GATES ON RIGHTS-OF-WAY

When not in use, gates shall be locked with a company-approved lock or double locked with the property owner's lock.

6.6 FIELD REFUELING AND MAINTENANCE OPERATIONS

Field Refueling

- When refueling vehicles, Company personnel or contractors at field locations are to bring vehicles or equipment to an access area away from environmentally sensitive areas (such as wetlands or drinking water sources). A paved area such as a parking lot or roadway is preferred, to minimize the possibility of spill or release to soil and the environment. The driver is to take all usual and reasonable environmental and safety precautions during refueling, such as connecting a safety

grounding strap between the fuel tank and vehicle or equipment being refueled. He or she is also to frequently check for fuel spills, drips, or seeps during the refueling operation.

Grease, Oil and Filter Change

- When a routine maintenance lubrication or oil change is scheduled on vehicles or equipment in the field, Company personnel or contractors at field locations are to bring vehicles or equipment to an access area away from environmentally sensitive areas (such as wetlands or drinking water sources) if at all possible. A paved area such as a parking lot or roadway is preferred, to minimize the possibility of spill or release to soil and the environment. The driver is to take all usual and reasonable environmental and safety precautions during routine lubrication and oil/filter changes. It is especially important to wipe up all minor drips or spills of grease and oil at field locations.

Other Field Maintenance Operations

- When other vehicle or equipment maintenance operations (such as emergency repairs) occur, Company personnel or contractors at field locations are to bring vehicles or equipment to an access area away from environmentally sensitive areas (such as wetlands or drinking water sources) if at all possible. A paved area such as a parking lot or roadway is preferred, to minimize the possibility of spill or release to the environment.

- Take all usual and reasonable environmental precautions during repair or maintenance operations. It is sometimes not feasible to move the affected vehicle or equipment from an environmentally sensitive area to a suitable access area. When this occurs, precautions should be employed to prevent oil or hazardous material release to the environment. These precautions include (but are not limited to) deployment of portable basins or similar secondary containment devices, use of ground covers, such as plastic tarpaulins, and precautionary placement of floating booms on nearby surface water bodies.

6.7 CONSTRUCTION BEST PRACTICES

As discussed below, permits, approvals, or agency notifications may be required when working in or near a wetland resource area or other protected waters. If you have any questions as to whether these are required for your work activity, contact your Environmental Engineer.

Whenever working in and around wetlands or other protected waters, certain construction practices should be implemented to minimize impact to the environment. The practices may

vary according to the area and scope of the work, but generally, these "best management practices" include:

Minimizing Soil and Vegetation Disturbance
Soil disturbance should be limited only to that necessary to safely operate equipment, excavate for structures and anchors, temporarily stockpile soils, and conducting the necessary repair or maintenance work. It may be necessary to use low bearing pressure or track vehicles if access through a wetland is required. Wooden timber mats or similar load-distributing materials - "swamp mats" - are generally used to cross wetlands or streams and to provide an equipment work surface at structures in wetlands. As applicable, the swamp mats should be placed in locations where swamp mats had been previously placed. Removal of the swamp mats is required upon completion of the work. Work conducted by distribution crews may not require the use of swamp mats as long as low-bearing or tracked equipment is used, wetland contours are maintained, rutting is prevented, and protected stream banks and beds are not disturbed.

Sedimentation Control
Silt fencing, straw bales, or wood chip bales should be installed between the work area and the wetland/waterway when the nature of the work could result in erosion/sedimentation caused by soil disturbance. Sedimentation controls should be inspected on a periodic basis and documented. Methods of documentation may include a written log or use of the *Stormwater and Wetlands Environmental Compliance Site Inspection/Monitoring Report* (see Environmental Guidance EG-303).

Restoring and Stabilizing the Area
When the work is completed the disturbed vegetation and soil must be restored and stabilized by:

- Regrading the area to pre-existing conditions;
- Seeding (if adequate root and seed stock are absent) and mulching the exposed soil;
- Removing strings and stakes from straw bales and using straw for the mulch; and,
- Removing siltation fencing and stakes and return to district facility for disposal as ordinary waste.

Be sure to consult any regulatory permit associated with the work in question to ensure compliance during and after the project construction.

6.8 NOTIFICATION

Because it is sometimes difficult to identify wetlands and other protected waters, an Environmental Engineer should be notified within 24 hours or by the next working day whenever emergency off-road repair work takes place. Planned off-road maintenance work

should be reviewed with an Environmental Engineer before work begins. Although the routine maintenance and emergency repair work is generally allowed, due to site conditions or the scope of the project, notification to the regulating agencies may be required by certain states.

6.9 TYPICAL BEST MANAGEMENT PRACTICE (BMP) DRAWINGS

Attachment A contains typical BMP drawings of some commonly-used methods for achieving ROW access, wetland and stream crossings, and erosion controls. Note that these typical BMP drawings are provided as general guidance and that project- or contract-specific specifications shall prevail over such guidance.

Attachment A

TYPICAL BEST MANAGEMENT PRACTICE DRAWINGS

FOR ROW ACCESS, MAINTENANCE AND CONSTRUCTION

CONTENTS

RIGHT-OF-WAY ACCESS

- TYPICAL ROAD GRADE AND TURNOUT INSTALLATION
- TYPICAL CONSTRUCTION ENTRANCE
- TYPICAL PLAN WATER BAR AND LEVEL SPREADER
  - SECTION 'A-A' (THROUGH WATER BAR)
  - SECTION 'B-B' (THROUGH LEVEL SPREADER)
- TYPICAL PLAN OPEN TOP LOG CULVERT

WETLAND AND STREAM CROSSINGS

- TYPICAL SWAMP MAT DETAIL
- TYPICAL STREAM CROSSING WITH CULVERT
  - SECTIONS 'A-A' AND 'B-B'
- TYPICAL STREAM CROSSING WITH SWAMP MATS
- TYPICAL PLAN STONE FORD
- TYPICAL STREAM FORD, TYPE 1 (WHERE LESS THAN 6" SOFT MATERIAL ON BED
- TYPICAL STREAM FORD, TYPE 2 (WHERE BETWEEN 6" AND 3' SOFT MATERIAL ON BED)
- TYPICAL STREAM FORD, TYPE 3 (WHERE GREATER THAN 3' SOFT MATERIAL ON BED)
- TYPICAL CORDUROY INSTALLATION FOR ACCESS ROADS

EROSION CONTROLS

- TYPICAL EMBEDDED SEDIMENT BARRIER INSTALLATION
- TYPICAL NONEMBEDDED SEDIMENT BARRIER INSTALLATION
- TYPICAL SEDIMENT CONTROL FENCE
- TYPICAL CHECK DAM INSTALLATIONS
- PROFILE OF TYPICAL FRENCH DRAIN INSTALLATION
- TYPICAL SEDIMENT TRAP INSTALLATION
- TYPICAL WATERBAR INSTALLATION
- TYPICAL REPRESENTATION OF SLOPE/SWALE STABILIZATION
- TYPICAL DEWATERING HAYBALE BASIN
- TYPICAL CONCRETE WASTE SUMP

7. MIGRATORY BIRDS

7.1 SCOPE AND RESPONSIBILITIES

Federal and State environmental regulations provide for the protection of migratory bird species and their nests. The Federal Migratory Bird Treaty Act makes it unlawful to take, possess, buy, sell, trade or barter any migratory bird, including its nests, eggs, feathers, or any parts or products made from migratory birds. A "take" is broadly defined to include capture, trap, collect, pursue, shoot, wound, or kill, and includes destroying nests. In addition to this law, the Endangered Species Act protects such migratory birds as the Bald Eagle, Peregrine Falcon and Osprey, by listing them as either endangered or threatened species (see Chapter 8 – Rare & Endangered Species).

Migratory birds include almost all birds encountered across National Grid's service territory and include birds of prey or raptors, such as the Bald Eagle and Osprey, and shorebirds, waterfowl and songbirds. Very few birds encountered within National Grid's Service Territory are not migratory. An on-line bird identification guide can be accessed at:

http://www.mbr-pwrc.usgs.gov/Infocenter/infocenter.html

The United States Department of Interior's Fish and Wildlife Service has Federal jurisdiction over migratory birds and their habitats. In addition, each of the states in which National Grid operates (Massachusetts, New Hampshire, Rhode Island, Vermont, and New York) has a fish and wildlife agency or bureau that provides protection to migratory birds and their habitats.

Environmental Engineers are responsible for providing Project Engineers and field operations with information and regulatory support for dealing with migratory bird interactions with National Grid facilities and rights-of-way. Environmental Engineers are also responsible for receiving any reports of migratory bird fatalities reported by field operations and for conveying such information to applicable Environmental Department Directors/Managers or other designated personnel for reporting to regulatory agencies, as required. Environmental Engineers are responsible for providing field operations with any applicable regulatory direction or guidance regarding the disposal of bird carcasses.

Environmental Engineers shall inform Project Engineers and field operations not to remove nests, or structures or poles containing nests, especially during the nesting season (generally from March to July), without first contacting an Environmental Engineer and receiving regulatory approval. Environmental Engineers or Forestry personnel are responsible for obtaining permits or permission from applicable regulatory agencies to allow field operations to remove or relocate nests that are interfering with operations.

7.2 REGULATORY AGENCY CONTACTS

State-specific regulatory agency contacts regarding migratory birds are provided in the following table:

Table 43.2 Migratory Bird Regulatory Agency Contacts

Agency	Location	Telephone Number
MA Department of Fish and Wildlife (DFW)	Westboro, MA	508-792-7270
RI DEM DFW Osprey Contact Lori Gibson	Wakefield, RI	401-789-0281
VT Fish and Wildlife	Waterbury, VT	802-879-5699
National Federal Wildlife Service Dave Dobias	Regional	413-253-8643
U.S. Fish and Wildlife (Endangered Species Division)	Hadley, MA	413-253-8615
NYSDEC – Division of Fish, Wildlife and Marine Resources	Albany, NY	518-402-8859

8. RARE & ENDANGERED SPECIES

8.1 SCOPE AND RESPONSIBILITIES

The various states within National Grid's service territory include occurrences and critical habitat areas of some Federal- and/or state-listed or proposed endangered or threatened wildlife species, pursuant to the Federal Endangered Species Act and associated state-specific laws and regulations. The Peregrine Falcon and Bald Eagle are examples of Federally-listed, endangered and threatened species, respectively, that are known to occur within portions of National Grid's service territory.

Some states also afford regulatory protection to other species of plants and wildlife that are classified as being rare or of special concern. Some unique ecological communities are afforded special protection by some states, as well.

The United States Department of Interior's Fish and Wildlife Service has jurisdiction over Federally-listed, non-marine species and their critical habitats and the National Marine Fisheries Service has jurisdiction over Federally-listed marine species and their critical habitats. In addition to these Federal agencies, each of the states in which National Grid operates (Massachusetts, New Hampshire, Rhode Island, Vermont, and New York) has a fish and wildlife agency or bureau that provides protection to such sensitive wildlife species.

To protect these wildlife species and habitats and comply with applicable regulations, Environmental Engineers are responsible for providing Project Engineers and field operations with project planning and regulatory compliance support, specifically by:

- identifying if proposed work may involve such species and/or their habitats by checking available regulatory agency information, such as GIS databases and mapping sources;
- coordinating communications with Federal and/or applicable state agencies and obtaining any necessary permits or approvals; and,
- providing direction on work site selection, scheduling, and practices to avoid or minimize disturbances to such species and/or their habitats.

8.2 STATE-SPECIFIC REGULATORY INFORMATION

The remainder of this chapter provides information on species listings and agency contacts for each of the states within National Grid's service territory.

8.2.1 MASSACHUSETTS

8.2.1.1 THE MASSACHUSETTS NATURAL HERITAGE AND ENDANGERED SPECIES PROGRAM

The Natural Heritage and Endangered Species Program (NHESP) is responsible for the conservation and protection of the commonwealth's biodiversity. Under its direct supervision is the protection of some 178 vertebrates and invertebrates and 264 native plants. These species constitute those officially listed as Endangered, threatened or of Special Concern under the Massachusetts Endangered Species Act (MESA).

NHESP's responsibility is broader than simply enforcing the provisions of MESA but for matters under consideration in Chapter 8 of EP No. 3, the conservation of rare species will be the focus.

Details regarding the NHESP including enabling regulations, compliance and enforcement can be found at http://www.mass.gov/dfwele/dfw/nhesp/nhesp.htm.

8.2.1.2 HABITAT MAPS FOR PROTECTED SPECIES

One unique aspect of the Massachusetts program is the availability of habitat maps either in paper format, Massachusetts Natural Heritage Atlas, or on CD (updated every two years in October). These media make available various-sized polygons, by municipality, wherein protected species have been documented. These habitats are termed Priority Habitats (PH), if jurisdictional under MESA, or Estimated Habitats (EH), if jurisdictional under the MA Wetlands Protection Act (WPA). Note that all EHs are by definition PHs but not vice versa. EHs focus on wetland vertebrates but PHs are all-inclusive.

The polygons simply indicate that one or more of the state-protected species resides within its boundaries. The polygon does not stipulate which species. Also, the polygon boundaries are inflated to cover most species-specific life cycle needs and to discourage collectors.

8.2.1.3 FILING REQUIREMENTS

If a project intercepts a PH, a filing with NHESP is required. Forms and fee schedules can be found on the associated links from the NHESP homepage. In general an Information Request Form plus filing fee is submitted to initiate the review. The form requires locational information (including a USGS topographic map showing the site in question) as well as information about the project. Depending upon the likelihood of project effects on protected species, the project may be approved with no further review. Should NHESP require a Project Review, a full description of the project with plans and resource areas delineated would be required (MESA Project Review Checklist). Fees depend upon the nature of the project. For linear projects greater than 1 mile in length, the fee is $4,000 per PH intercepted.

Assuming NHESP decides the project will not involve a "take" (extremely liberally interpreted to include any disruption of species life stages OR habitat), NHESP's involvement will end. Note that many times such a no-take determination will hinge upon seasonal construction windows/time of year restrictions, real time construction monitoring by a professional wildlife biologist or botanist, or related protections.

Should the NHESP determine that a take is likely, the next step is to file for a MESA Conservation and Management Permit. Besides more project-specific detail, such a permit application must demonstrate "long-term net benefit to the conservation of the impacted species". The Conservation and Management Plan might include permanent habitat protection on or off-site, habitat restoration or management, research directed to rare species, and contributions to off-site plans by others.

8.2.1.4 MAINTENANCE EXEMPTIONS

National Grid championed the inclusion of a MESA exemption for public utility maintenance projects. Our exemption is predicated upon development by Grid of an Operations and Maintenance Plan (OMP) to be updated annually. In 2005, Grid developed a 2-volume OMP focusing upon typical maintenance activities and appropriate Best Management Practices (BMPs) as well as USGS-based maps of unlabeled transmission line rights-of-way (ROWs) overlain by PH polygons.

The annual updates consist of shape files of the upcoming year's maintenance project sites, documentation of rare species training for the construction crews, documentation of biologists reconnaissance surveys at the construction site (only for PH areas), and other materials which become available and help to

prove conservation and protection of protected species while working in PH. The annual fee to be submitted with the annual OMP update is $3,000.

8.2.2 RHODE ISLAND

8.2.2.1 THE RHODE ISLAND NATURAL HERITAGE PROGRAM (NHP)

The RI NHP is a comprehensive statewide inventory of Rhode Island's rarest and most vulnerable natural features. The Program was established in 1978 as a cooperative venture of The Nature Conservancy (a national, non-profit land conservation organization) and the Department of Environmental Management (DEM). The NHP is a part of the DEM's Bureau of Policy and Administration's Division of Planning and Development. The NHP web site is located at:

http://www.dem.ri.gov/programs/bpoladm/plandev/heritage/index.htm

The NHP maintains an extensive and dynamic database of maps, computer files, and other materials documenting the locations of rare species and other significant natural features, management and stewardship needs, and threats to critical areas. The NHP has developed lists of those species considered to be endangered, threatened, or of special concern in the state. Surveys are conducted annually to locate and monitor rare plants, vertebrate and selected invertebrate animals, and exemplary natural communities. In addition, the Program is a cooperator in several long-term surveys to define the distribution and status of selected biotic groups, including breeding birds, reptiles and amphibians, and plants. These surveys will provide a library of baseline information upon which to assess future changes in the Rhode Island environment. The NHP works closely with several groups on these studies including the Rhode Island Wild Plant Society, Rhode Island Natural History Survey (www.edc.uri.edu/rinhs/), and the New England Plant Conservation Program (www.newfs.org/nepcop.htm). The NHP is currently linked to similar programs in all 50 states through the Association of Biodiversity Information (www.abi.org), which provides institutional and database support, as well as coordination of nationwide data requests.

The Program also reviews development proposals and provides coordination for agencies requiring information on the potential impacts to endangered species. NHP staff conduct inventories and site assessments for potential

occurrence of rare species and unique habitats, and also conducts site-specific inventories of plants, breeding birds, reptiles and amphibians, and selected invertebrates. Results obtained by survey work allows the NHP to provide guidelines for the most beneficial management schemes to maintain diverse natural communities.

8.2.2.2 RI FRESHWATER WETLANDS REGULATIONS

The ability of a freshwater wetland to function as a wildlife habitat for rare animal and plant species is a value identified in the RI Freshwater Wetlands Regulations which the DEM will consider when evaluating projects. Specifically, The Freshwater Wetlands Regulations excludes projects which may result in the disturbance or destruction of a rare species from consideration as an "Insignificant Alteration" (Appendix 1 (B)) and "Exempt Activities" (6.02(D)(4)).

The Freshwater Regulations define Rare Species as follows:

Rare Species or Rare Wetland Type means those invertebrate and vertebrate animals or plant species (which exist either individually or as a group) or wetland types listed as threatened, endangered, of special interest or of special concern by the Department's Rhode Island Natural Heritage Program; by the Department's Division of Fish, Wildlife, and Estuarine Resources; and/or under the Federal Endangered Species Act.

For Federal Endangered Species Act information, contact the U.S. Department of Interior Fish and Wildlife Service office in Concord, NH.

8.2.3 NEW HAMPSHIRE

8.2.3.1 NEW HAMPSHIRE PROGRAMS

Rare species programs in New Hampshire are administered by two distinct agencies. Rare plants and exemplary natural communities are administered by the NH Natural Heritage Bureau in the Division of Forests & Lands. Conversely NH's Non-game and Endangered Wildlife Program is under the aegis of the state Fish and Game Department.

Contacts for each can be accessed through the following links:

www.dred.state.nh.us/re-direct.htm
or
www.dred.state.ne/us/forlands/formgt/nhiweb/
and
www.wildlife.state.nh.us/Wildlife/nongame_and_endangered_wildlife.htm

8.2.3.2 NOTIFICATIONS

The NH Department of Environmental Services, Wetlands Bureau, in their Wetlands Dredge and Fill Application lists a number or state agencies which may have input to the subject application. Both the NH Natural Heritage Bureau and NH Fish & Game are listed along with contact information.

Under Section Wt 302.04 Requirements for Application Evaluation is item (7) lists the following:

a. Rare. Special concern species;
b. State and federally listed threatened and endangered species;
c. Species at the extremities of their range;
d. Migratory fish and wildlife; and
e. Exemplary natural communities identified by the NH Natural Heritage Inventory

8.2.4 VERMONT

8.2.4.1 RARE, THREATENED AND ENDANGERED SPECIES PROTECTION

The Vermont Fish & Wildlife Department, Non-Game and Natural Heritage Program is responsible for the inventory, management, and conservation of Vermont's nongame wildlife, native plants and natural communities. Within this broad scope is the protection of endangered and threatened species of plants and wildlife.

State law protects endangered and threatened species (Vermont Endangered Species Law, 10 V.S.A. Chap. 123). In essence, no person may take or possess such species listed by Vermont NNHP without a permit. "Take" is broadly construed to basically cover all activities detrimental to the species in question.

8.2.4.2 PERMITS AND VARIANCES

Permits may be granted for legitimate purposes (scientific study, enhancement and propagation, educational purposes and the like). A variance may be issued pursuant to 10 VSA section 5408.

Various Vermont regulations address rare species matters. These include Act 250, the Vermont wetland rules, and stormwater general permits. Consult these programs for specific procedures for dealing with such species.

8.2.4.3 CONTACTS

The web address for the non-game program is---
http://www.vtfishandwildlife.com/wildlife_nongame.cfm

For specific information the contacts are---

Nongame & Natural Heritage Program
VT Fish & Wildlife Department
103 South Main St.
Waterbury, VT 05671-0501

Animals
Mark Ferguson
802-241-3667

Plants
Bob Popp
802-476-0127

8.2.5 NEW YORK

8.2.5.1 AGENCY CONTACTS/INFORMATION

The U.S. Fish and Wildlife Service's New York Field Office provides endangered and threatened species listings and contact information at http://www.fws.gov/northeast/nyfo/es/section7.htm. The New York State Department of Environmental Conservation's (NYSDEC's) Division of Fish, Wildlife and Marine Resources provides endangered and threatened species listings and contact information at their Endangered Species Program website, at http://www.dec.ny.gov/animals/7494.html.

The NYSDEC's New York Natural Heritage Program provides information on rare plants and animals and significant ecological communities at http://www.dec.ny.gov/animals/29338.html.

NY Environmental Engineers can also access the Environmental Department's ArcView GIS software for mapping and database information provided by the NYSDEC's Natural Heritage Program. This software is capable of showing users where natural heritage zones and "hits" occur relative to existing or proposed project sites.

8.2.5.2 KARNER BLUE BUTTERFLY AND FROSTED ELFIN

Known habitats of the Federal- and NYSDEC-listed endangered Karner blue butterfly (*Lycaeides Melissa samuelis*) and the NYSDEC-listed threatened Frosted Elfin butterfly (*Callophyrs irus*) occur on some of National Grid's rights-of-way in the NY Eastern Division, specifically within portions of Albany, Schenectady, Saratoga, Warren Counties, as well as a portion of Oneida County. The aforementioned ArcView GIS software includes the mapped locations of such known habitat areas. These habitat locations are marked on the rights-of-way, with signs that post restrictions and information about contacting Forestry or the Environmental Department, before performing any work in or near these habitat areas.

Pursuant to the Federal Endangered Species Act and NYSDEC regulations, Incidental Take Permits (ITPs) are required to authorize National Grid's continuing operation, maintenance, reconstruction and new construction activities on rights-of-way that provide Karner blue butterfly and Frosted Elfin habitats. After approving of National Grid's Habitat Conservation Plan (HCP) for these species and their right-of-way habitats, the USFWS and NYSDEC issued ITPs to National Grid, effective July 12, 2012 and August 22, 2012, respectively. The HCP, ITPs and an associated Implementing Agreement (IA) with the USFWS are provided in EG-305NY.

EG-305NY also provides a HCP implementation guidance sheet, to assist Planners, Engineers, Field Supervisors, Field Crews, Foresters or anyone that plans or performs work activities involving these protected species and their habitats. The Environmental Department and Forestry are to be contacted before work is performed in these marked habitat areas, to coordinate compliance with these ITPs.

In accordance with the USFWS and NYSDEC ITPs, no vegetative maintenance activities are to be conducted at the known habitat locations between April 1

and August 31. The HCP and ITPs provided in EG-305NY also specify use of avoidance and minimization measures (AMMs) in planning and performing work activities that involve the affected right-of-way habitats.

8.2.5.3 OTHER SPECIES

Some other listed endangered or threatened species that are known to occur within National Grid's New York service territory include the Bog Turtle (*Clemmys muhlenbergii*), Eastern Massasauga (Sistrurus catenatus catenantus; a species of rattlesnake), Indiana Bat (*Myotis sodalis*), Shortnose Sturgeon (*Acipenser brevirostrum*), Eastern Tiger Salamander,(*Ambystoma tigrinum*), and the Piping Plover (*Charadrius melodus*). Information about these and other listed species are provided at the aforementioned U.S. Fish and Wildlife Service and NYSDEC websites.

9. CULTURAL, HISTORIC AND OTHER NATURAL RESOURCES

9.1 SCOPE AND RESPONSIBILITIES

The various states within National Grid's service territory include numerous sites and properties that have been designated by authorities to have significant natural, archaeological, historical, scenic, aesthetic or recreational values. Many of these locations are protected by the National Historic Preservation Act of 1966 and by implementing regulations of the various states. Some of these sites include properties or structures that have been placed on or nominated for state and National Registers of Historic Places. Other locations have been protected by designation as national, state or local parks, preserves, refuges, sanctuaries, seashores, coastal zones, scenic vistas, or agricultural areas.

The United States Department of Interior's National Park Service has jurisdiction over Federally-designated historic and park sites, the U.S. Forest Service has jurisdiction over National Forests, and the U.S. Fish and Wildlife Service has jurisdiction over Federally-designated refuges. In addition to these Federal agencies, each of the states in which National Grid operates (Massachusetts, New Hampshire, Rhode Island, Vermont, and New York) has an agency or bureau that provides protection to other unique and/or sensitive resource areas.

To protect these sensitive areas and comply with applicable regulations, Environmental Engineers are responsible for providing Project Engineers and field operations with project planning and regulatory compliance support, specifically by:

- identifying if proposed work may involve designated sites by checking available regulatory agency information, such as GIS databases and mapping sources;

- coordinating communications with Federal, state and local authorities, as applicable, and providing support for obtaining any necessary permits or approvals; and,
- providing direction on work site selection, scheduling, and practices to avoid or minimize disturbances to such resources.

9.2 STATE-SPECIFIC REGULATORY INFORMATION

The remainder of this chapter provides information on agency contacts, associated requirements, and some of the higher profile resource areas for each of the states within National Grid's service territory.

9.2.1 MASSACHUSETTS

9.2.1.1 MA HISTORICAL COMMISSION

The Massachusetts Historical Commission (MHC) is charged with overseeing the historical and archaeological resources of the Commonwealth by reviewing projects being proposed which require funding, licenses, or permits from any state or federal government agency.

In terms of federal regulation (Section 106 review), the MHC also serves as the State Historic Preservation Officer (SHPO).

Information regarding the MHC, its programs, forms, and resources can be accessed at:

http://www.sec.state.ma.us/mhc

9.2.1.2 PROCEDURES

Initiating MHC review is relatively straightforward. It usually happens by one of two means, both driven by the applicant. If the applicant receives a state or federal permit, a Project Notification Form is submitted to MHC. The form includes the location of the project; a project description; whether the project involves demolition, rehabilitation, or new construction. Information about land use, total project acreage vs. new construction acreage, and a USGS quadrangle map clearly marking the project location.

Upon review the MHC renders an opinion as to whether the project is likely to have an effect on historic or archaeological resources. If the answer is "no" the review ends. If the answer is "yes" or "maybe", the MHC will issue a letter specifying the reconnaissance or inventory studies needed to determine

potential impact of to clear the site thereby ending review. The studies can involve more that one level of inventory depending upon initial findings.

The other trigger is if the applicant trips a MA Environmental Policy Act (MEPA) threshold along with requiring a state permit associated with that threshold, the applicant will be required to prepare a MEPA Environmental Notification Form (ENF). The ENF contains a section dealing with cultural resources. That section queries whether there are any known historic (e.g., as evidenced from the State Register of Historic Sites) or archaeological resources. Whether or not the applicant knows of such resources, MHC is one of the statutory recipients of the ENF and will do its own internal file search. An MHC comment letter will be sent to the Secretary of the Executive Office of Energy and Environmental Affairs (EOEEA) so noting the results and indicating whether cultural resources are absent or if further study is required of the applicant.

Assuming the field studies result in archaeological resources being discovered within the construction footprint, the applicant has the choice of avoidance or recovery. Upon successful resolution, MHC's involvement ends.

9.2.2 RHODE ISLAND

9.2.2.1 THE RHODE ISLAND HISTORICAL PRESERVATION AND HERITAGE COMMISSION

The Rhode Island Historical Preservation and Heritage Commission (RIHPHC) is charged with overseeing the historical and archaeological resources of the State of Rhode Island by reviewing projects being proposed which require funding, licenses, or permits from any state or federal government agency.

In terms of federal regulation (Section 106 review), the RIHPHC also serves as the State Historic Preservation Officer (SHPO) State legislation mirroring Section 106 can be found under Rhode Island General Laws 42-45.

Information regarding the RIHPHC, its programs, forms, and resources can be accessed at: http://www.preservation.ri.gov/

9.2.2.2 PROCEDURE

If a project requires a state or federal permit, a Phase IA disturbance assessment (for small projects) or a Phase IB archaeological reconnaissance

survey is submitted to RIHPHC for review. The survey includes a review of RIHPHC files and maps for known archeological resources within the project area of potential effect (APE) that is listed in the National Register of Historic Places or is inventoried in RIHPHC files, the location of the project; a project description; information about land use, a USGS quadrangle map clearly marking the project location; and a field visit involving either vehicular or pedestrian survey as appropriate.

Upon review the RIHPHC renders an opinion as to whether the project is likely to have an effect on historic or archaeological resources. If the answer is "no" the review ends. If the answer is "yes" or "maybe", the RIHPHC has 30 days to issue a letter specifying the reconnaissance or inventory studies needed to determine potential impact to clear the site thereby ending review. The studies can involve more than one level of inventory depending upon initial findings. Typically, a Phase IC Intensive Survey is recommended, should the APE have archaeological potential.

Assuming the field studies result in archaeological resources being discovered within the construction footprint, the applicant has the choice of avoidance or recovery. Upon successful resolution, RIHPHC's involvement ends.

9.2.3 NEW HAMPSHIRE

9.2.3.1 NEW HAMPSHIRE DIVISION OF HISTORICAL RESOURCES

The New Hampshire Division of Historical Resources (NHDHR) is charged with overseeing the historical and archaeological resources of New Hampshire by reviewing projects being proposed which require funding, licenses, or permits from any state or federal government agency.

In terms of federal regulation (Section 106 review), the NHDHR also serves as the State Historic Preservation Officer (SHPO).). State legislation mirroring Section 106 can be found under RSA 227-C:9.

Information regarding the NHDHR, its programs, forms, and resources can be accessed at: https://www.nh.gov/**nhdhr**/

9.2.3.2 PROCEDURE

If the applicant receives a state or federal permit, project information is provided to NHDHR through the application process. Upon review the NHDHR renders an opinion as to whether the project is likely to have an effect on historic or archaeological resources. If the answer is "no" the review ends. If the answer is "yes"

or "maybe", the NHDHR will issue a letter specifying the initial level of study needed to determine potential impacts. Most commonly, a Phase IA archaeological sensitivity assessment is recommended as a starting point. Survey requires coordination with NHDHR to review their site inventory files, background research, and pedestrian survey of the APE. The studies can involve more than one level of inventory depending upon findings.

NHDHR reviews the initial report and then provides recommendations within 30 days as to whether or not additional survey will be required. Phase IA surveys are typically followed by Phase IB Intensive Archaeological Investigations, if necessary.

Assuming the field studies result in archaeological resources being discovered within the construction footprint, the applicant has the choice of avoidance or recovery. Upon successful resolution, NHDHR's involvement ends.

9.2.4 VERMONT

9.2.4.1 THE VERMONT DIVISION FOR HISTORIC PRESERVATION

The Vermont Division for Historic Preservation (VDHP) is charged with overseeing the historical and archaeological resources of the State of Vermont by reviewing projects being proposed which require funding, licenses, or permits from any state or federal government agency.

In terms of federal regulation (Section 106 review), the VDHP also serves as the State Historic Preservation Officer (SHPO). State legislation mirroring Section 106 can be found under 22 VSA 14, among others.

Information regarding the VDHP, its programs, forms, and resources can be accessed at: http://accd.vermont.gov/strong_communities/preservation/

9.2.4.2 PROCEDURE

If a project requires a state or federal permit, an Archaeological Resources Assessment is submitted to VDHP for review. The assessment includes a review of VDHP files and maps for known archeological resources within the project area of potential effect (APE); a project description; information about land use, a USGS quadrangle map clearly marking the project location and a site visit.

Upon review of the ARA, the VDHP renders an opinion as to whether the project is likely to have an effect on historic or archaeological resources. If the answer is "no" the review ends. If the answer is "yes" or "maybe", the VDHP

has 30 days to issue a letter specifying the reconnaissance or inventory studies needed to determine potential impact to clear the site thereby ending review. The studies can involve more than one level of inventory depending upon initial findings.

Most commonly, a Phase I archaeological identification study is recommended as a starting point. Survey requires coordination with VDHP to review any scope of work. The studies can involve more than one level of inventory depending upon findings.

Assuming the field studies result in archaeological resources being discovered within the construction footprint, the applicant has the choice of avoidance or recovery. Upon successful resolution, VDHP's involvement ends.

9.2.5 NEW YORK

9.2.5.1 PARKS, RECREATIONAL SITES AND HISTORIC RESOURCES

The New York State Office of Parks, Recreation and Historic Preservation (OPRHP) has jurisdiction over State Parks and historic preservation. Their website address is: http://www.nysparks.state.ny.us. The Historic Preservation Field Service Bureau's website address is: http://www.nysparks.state.ny.us/shpo. The New York State Historic Preservation Office (SHPO) has advised that consultation with the SHPO is mandatory for projects that involve state or federal permitting or involvement. The SHPO has requested that project screening for the general presence or absence of cultural resources be performed by checking with their On Line Resource Center. SHPO's On Line Resource Center includes three, web-based programs, consisting of a GIS-based overview of cultural resource locations, a National Register Document Imaging Program, and a State Preservation Historic Inventory Network Exchange (SPHINX). After consulting with these programs, Environmental Engineers can submit a project review request to the SHPO, for an official determination of project effect on any known resources and any related requirements for further studies or surveys.

9.2.5.2 ADIRONDACK PARK

This approximately 6 million acre State Park is the largest publicly protected area in the contiguous United States, greater in size than Yellowstone, Everglades, Glacier, and Grand Canyon National Parks, combined, and comparable in size to the entire state of Vermont. About 48 percent of the Park

belongs to the people of New York State and is constitutionally protected to remain "forever wild" forest preserve. The remaining 52 percent is private land which includes settlements, farms, timber lands, businesses, homes and camps.

The Adirondack Park Agency (APA) is a New York State government agency that, in cooperation with the NYSDEC, is responsible for developing and maintaining a master plan for the use of all state lands in the Park. The State Land Master Plan was signed into law in 1972, followed by the Adirondack Park Land Use and Development Plan (APLUDP) in 1973. The APA administers the Adirondack Park Agency Act (which includes the APLUDP and the regulations derived from it), the New York State Freshwater Wetlands Act, and the New York State Wild, Scenic and Recreational Rivers System Act. The NYSDEC has responsibility for the care, custody and control of state lands in the Park (including permitting associated with protected waters and use of state lands).

The potential for and type of permits that are required for certain activities in the Park depend largely upon what classifications of private and/or state lands are involved with a particular project. Six classifications of private land uses and nine classifications of state land uses are included in the APLUDP. Critical Environmental Areas (CEAs) are subcategories of the general land use area classifications and are provided extra protection by the law. These CEAs include wetlands, high elevations, areas around designated study rivers, state or federal highways, and lands in proximity to certain classifications of state-owned lands.

For new construction or reconstruction projects in the Park, an APA permit is generally required if the project involves:

- Any new electric line rated at more than 15kV and one mile or longer in length (except where subject to PSC Article VII jurisdiction)
- Any communication transmission tower
- Any gas pipeline (or any fuel pipeline) one mile or longer in length (except where subject to PSC Article VII jurisdiction)
- Any new electric substation or maintenance building
- An expansion totaling 25% or more of an existing use or structure (measured by size, square footage or capacity)
- Structures over 40 feet high (above-ground height)
- Clear-cutting more than 25 upland acres or 3 wetland acres of non-shoreline lands

- Wetlands (1 acre or larger, however, smaller wetlands may apply if deemed ecologically significant by the APA)
- Land at an elevation of 2,500 feet or more (except in Hamlet areas)
- Land within 1/8 mile of State wilderness, primitive or canoe areas (except in Hamlet areas)
- Land within ¼ mile (especially the 100 feet buffer zone) of a "study river" being considered for inclusion in the State's Wild, Scenic and Recreational Rivers System, including portions of the Oswegatchie, Osgood, Grasse, N. Branch Saranac, N. Branch Boquet, The Branch, East Stony Creek and Pleasant Lake Stream
- Land within ¼ mile (especially the 100 feet buffer zone) of a designated river included in the State's Wild, Scenic and Recreational Rivers System, including the Ausable, Black, Blue Mt. Stream, Bog, Boreas, Boquet, Cedar, Cold, Deer, East Canada Creek, Grasse, Hudson, Independence, Indian, Jordan, Kunjamuk, Long Pond Outlet, Marion, Moose, Oswegatchie, Otter Brook, Raquette, Rock, Sacandaga, St. Regis, Salmon, Saranac, Schroon, West Canada Creek and West Stony Creek
- Shoreline of a lake, pond, river or stream that is navigable by boat or canoe (shoreline cutting restrictions apply to all vegetation within a 6 foot zone and to trees within a 35 foot zone; structural setback distances may also apply)
- Land within 150 feet of state or federal highway right-of-way (in Rural Use areas, only)
- Land within 300 feet of state or federal highway right-of-way (in Resource Management areas, only)
- Designated Scenic Vista areas

Environmental Engineers are responsible for supporting Project Engineers and field operations with permitting assessments, including potential Jurisdictional Inquiries with the APA, other consultations with APA staff, permitting, and compliance. The APA can be contacted at (518) 891-4050, at their website address of http://www.state.ny.us, or by mail to:

Adirondack Park Agency
P.O. Box 99
Ray Brook, NY 12977

Projects that consist of tree clearing, stream crossings, or storm water management-related activities involving the Lake George Park may also involve the jurisdiction of the Lake George Park Commission. The Lake George Park is a 300 square mile park, of which about one-half is publicly

owned and 100 square miles of it consists of State Forest Preserve lands. The Lake George Park Commission can be contacted at (518) 668-9347, at their website address of http://www.lgpc.state.ny.us/reg1.htm, or by mail to:

Lake George Park Commission
P.O. Box 749 Fort George Road
Lake George, NY 12845-0749

9.2.5.3 COASTAL ZONE MANAGEMENT AREAS

Projects that require a federal permit (and/or those undertaken directly by a state agency or authority (e.g., LIPA) and that lie within the Coastal Zone (primarily the shorelines of Lake Erie, Niagara River, Lake Ontario, St. Lawrence River, estuary portions of the Hudson River, Long Island Sound and the Atlantic Ocean), require a Federal Consistency Assessment, to be reviewed and acted upon by the New York Department of State.

Environmental Engineers support Project Engineers with completion and submittal of a Federal Consistency Assessment Form, intended to assist applicants in certifying that a proposed activity is consistent with New York State's Coastal Management Program (CMP), as required by the U.S. Department of Commerce regulations (15 CFR 930.57).

The New York State Department of State can be contacted at (518) 474-6000, at their website address of http://www.coastal@dos.state.ny.us, or by mail to:

New York Department of State
Division of Coastal Resources
41 State Street
Albany, NY 12231

9.2.5.4 STATE FOREST PRESERVES, STATE FORESTS, UNIQUE AREAS AND MULTIPLE-USE AREAS

Projects that require new or expanded uses of designated State Forest Preserves, State Forests, Unique Areas and Multiple-Use Areas are subject to the jurisdiction of the NYSDEC's Division of Lands and Forests, Bureau of Public Lands. The Bureau is responsible for the management and care of nearly four million acres of land owned by the people of the State of New York.

These lands include the 2.9 million acre Adirondack and Catskill Forest Preserves which include all state owned land within the Adirondack and Catskill Parks. Forest Preserve lands are protected as "forever wild" by the New York State Constitution. Most of the 700,000 acres of State Forests, Unique Areas and Multiple-Use Areas throughout New York State are open for public use and recreation.

Environmental Engineers typically support Project Engineers, Real Estate Rights, and Forestry with the identification of such protected areas, as part of the project screening process, and, as required, with any subsequent permitting activities. For many of these lands, particularly designated wilderness and wild forest lands, new or expanded activities are simply prohibited by the NYSDEC. On a very limited basis, however, the NYSDEC is willing to issue Temporary Revocable Permits (TRPs), authorizing some uses.

The NYSDEC's Division of Lands and Forests, Bureau of State Land Management can be contacted at their website: http://www.dec.state.ny.us/website/dlf/publands/index.html.

9.2.5.5 FEDERAL REFUGES

National Grid has some transmission line facilities that cross portions of two refuges that are part of the U.S. Fish & Wildlife Service's National Wildlife Refuge System. The Montezuma National Wildlife Refuge is located at the north end of Cayuga Lake, in Seneca, Cayuga, and Wayne Counties. The Iroquois National Wildlife Refuge lies within the rural township of Alabama, midway between Buffalo and Rochester. The respective refuge offices are to be contacted prior to performing any line maintenance activities within these refuges, per the following contact information:

Montezuma National Wildlife Refuge
3395 Route 5 & 20 East
Seneca Falls, NY 13148
Telephone: (315) 568-5987

Iroquois National Wildlife Refuge
1101 Casey Road
Basom, NY 14013
Telephone: (585) 948-5445

9.2.5.6 AGRICULTURAL AREAS

For major projects that require new construction or reconstruction activities in active agricultural lands, the State of New York Department of Agriculture and Markets can be consulted, as necessary, to determine any special mitigation measures. This following agency contact can provide information, for such projects:

Mr. Matthew J. Brower
Agricultural Resource Specialist
Division of Agricultural Protection and Development Services
State of New York
Department of Agriculture and Markets
1 Winners Circle
Albany, NY 12235
Telephone: (518) 457-2713 or (518) 457-7076

As appropriate, special mitigation measures may be applied to some work activities to avoid or minimize impacts to agricultural lands and uses.

In general, impacts to agricultural soils and uses can be minimized during construction or reconstruction projects through use of the following practices:

- consulting with affected farmers prior to performing the work, to determine appropriate access routes, work areas, any sensitive sites (such as drainage tiles or lines), and planting/harvesting schedules;
- strategic scheduling of daily activities to avoid wet, unstable soils and cultivated fields;
- use of a single access route and tracked or high flotation-tired equipment to reduce soil disturbances and compaction;
- framing structures in the air, where appropriate, to reduce ground impacts; and,
- restoration of fields, fencing and gates, including regrading and seeding, in consultation with affected farmers.

10. HERBICIDE & PESTICIDE USE

10.1 SCOPE AND RESPONSIBILITIES

In support of its day-to-day operations, along with maintaining LIPA owned rights-of-way and substations, National Grid uses pesticides, herbicides and/or biocides for purposes of effectively controlling:

- undesirable vegetation along electric and natural gas line rights-of-way;
- undesirable vegetation at substations, gas regulator stations, and other facilities; and,
- pests that may pose threats to worker safety and/or facility integrity and reliability.

National Grid's Transmission Forestry Department is the primary user of herbicides, to help maintain more than 100,000 acres of land along 9,000 miles of electric transmission rights-of-way. National Grid uses Integrated Vegetation Management (IVM) techniques to target individual trees or clumps of tall-growing tree species that pose line interference and outage risks.

IVM employs a variety of techniques including biological controls, hand cutting and selective application of herbicides to control tall-growing trees. Biological control involves promoting the establishment of low-growing plant species that help prevent the growth of tall tree species on the rights-of-way.

Selective use of herbicides applied directly to individual tall-growing trees allows low-growing shrubs, grasses, ferns and herbaceous plants to thrive and resist re-growth of trees. These targeted IVM techniques minimize the quantity of herbicides required, which in turn minimizes their impact on stable, low-growing communities of grasses, herbs and shrubs that pose no threat to electric conductors.

National Grid Transmission and Distribution Forestry Departments are responsible for complying with Federal and state-specific requirements for use of herbicides, including associated regulatory reporting and registrations, applicator training, spill reporting and response, and product/container disposal (see state-specific EGs). National Grid's field operations are responsible for complying with Federal and state-specific requirements for use of other pesticides needed to maintain worker safety and facility integrity and reliability (see state-specific EGs).

Environmental Engineers are responsible for supporting Forestry and field operations with information about protected natural resources, as requested, and helping to obtain any required permits or regulatory approval associated with site-specific use of herbicides or pesticides in protected natural resource areas, such as in state regulated wetlands and/or wetland buffer areas.

10.2 PROTECTION OF NATURAL RESOURCES

National Grid's Transmission Forestry Department employs various strategies aimed at protecting natural resources, particularly sensitive aquatic resources, from herbicide applications and other right-of-way maintenance activities. Such strategies include:

- maintaining buffer zones of compatible, low-growing vegetation at sensitive aquatic sites,
- utilizing highly selective, stem-specific treatments within these buffers, together with herbicide products that are specifically approved for ditch bank, stream bank, or aquatic use,
- employing non-herbicide management methods within buffer zones when a risk of contamination exists,
- obtaining any required permits for herbicide applications in protected wetlands and buffer zone areas,
- identifying private drinking water supplies within or immediately adjacent to the right-of-way through the field inventory process, and establish appropriate buffer zones to maintain and protect water quality,
- identifying and protecting any known populations of threatened, endangered or other species of special regulatory concern, and
- conducting all treatment activities adjacent to sensitive aquatic resources to maximize retention of compatible shrub and herbaceous communities, to help reduce or avoid erosion impacts.

10.3 GENERAL REGULATORY REQUIREMENTS FOR PESTICIDE USE

All pesticides used by National Grid, or under contract to National Grid, must be registered by the U.S. Environmental Protection Agency (EPA) and by respective state environmental regulatory agencies, as applicable. Some states, such as New York, require businesses that apply pesticides to register annually with state environmental regulatory agencies and to submit annual reports of pesticide quantity usage.

All pesticide product containers must contain the EPA registration number on the container label. Pesticides are to be used only in accordance with label directions and must be used in such manner and under such wind and other conditions as to prevent contamination of people, pets, fish, wildlife, crops, property, structures, lands, pastures, or waters adjacent to the areas of use.

Some states require that during pesticide use, the certified applicator, certified technician or commercial pesticide apprentice must have access to a copy of the label for each pesticide

being used and must make each label available for inspection upon request of a regulatory agency inspector.

11. UNAUTHORIZED DUMPING

11.1 SCOPE AND RESPONSIBILITIES

The unauthorized dumping or disposal of waste materials on National Grid rights-of-way and other properties may pose a threat to natural resources and/or constitutes violation of environmental regulations. EG-308 provides state-specific guidance to field operations and other National Grid personnel for assisting in identifying unauthorized waste disposal situations and for notifying designated National Grid Security and Legal personnel.

Environmental Engineers are responsible for assisting Legal personnel, as requested, with a review of such incidents and helping to determine if any protected natural resources are involved and if any environmental regulatory agency notification is required. Environmental Engineers may also be asked to assist with any follow-up environmental regulatory coordination and response activities, as required to resolve the situation.

SUBJECT	REFERENCE
Protected Waters	**EP No. 3 – Natural Resource Protection (Chapter 5)**

PURPOSE: This document provides an overview of regulations governing waters and wetlands in Massachusetts (MA).

SCOPE: Projects/operations which may impact wetland resource areas may wish to review this information to ensure regulatory requirements are met.

RESPONSIBILITIES: It is the responsibility of all personnel to ensure that National Grid's activities do not adversely impact the environment.

PROCEDURE: The various states within National Grid's service territory include abundant and diverse sources of ground and surface waters that are protected by various regulatory authorities. Many of National Grid's transmission and distribution facilities cross and/or pass near to these water resources. **Contact your local environmental resource for assistance in determining if environmental permits are needed.** This EG provides a brief overview of these regulations.

1. MA WETLANDS PROTECTION ACT AND REGULATION

The Massachusetts Wetlands Protection Act (WPA) regulates coastal and inland wetlands and waters, and for some of these resources areas, an adjacent 100-foot buffer zone. Inland and coastal resources are regulated by specific definition, with work performance standards enumerated in the regulations. The Act (M.G.L. c. 131, Section 40) is administered by local conservation commissions with MA Department of Environmental Protection (DEP) Division of Wetlands and Waterways oversight. The regulations promulgated to enforce the Act are at 310 CMR 10.00 et seq.

- **Maintenance —** There is a maintenance provision for utilities in the Wetlands Protection Act statutory language (M.G.L. 131 Section 40) which simply states that "utilities" may repair, replace, and maintain, but not substantially change or enlarge, existing and lawfully located structures or facilities without a Notice of Intent.
- **Minor Exempt Activities – New** utility minor exemptions (310 CMR 10.02(2)(b)(2)) were promulgated in 2014 that exempt several catoegries of work that are located only within the buffer zone or Riverfront Area from requiring a Request for Determination of Applicability or Notice of Intent filing.

- **Local Bylaws** – Many communities have enacted home-rule wetland and waterway protection through the adoption of local bylaws, ordinances, and regulations which retain or expand the language of the WPA. Consultation at the local level is necessary to obtain the current version of such regulations. Such bylaws may eliminate the maintenance exemption and the minor activities exemption.
- **Regulatory Filing** – A Request for a Determination of Applicability (RDA) may be filed when work is proposed within the Buffer Zone or for certain minor activities in regulated areas. A Notice of Intent (NOI) is filed with the local Conservation Commission and DEP when work is proposed that will alter a wetland resource area. Refer to EG-302.1-MA for information on the NOI process.

2. MA WATER QUALITY CERTIFICATION

A 401 Water Quality Certification is required under the Federal Clean Water Act for the discharge of dredged or fill material to Waters of the U.S. The purpose of the State 401 review is to ensure that a project will comply with state water quality standards and other appropriate requirements of state law. Regulatory authority for this certification is found in 314 CMR 9.00. Water quality standards referenced in the certification are found in 314 CMR 4.00.

A 401 Water Quality Certification issued by the Massachusetts Department of Environmental Protection (DEP) is a determination that the proposed activity will not violate the Massachusetts Surface Water Quality Standards. The DEP may, as a result of its review, assign special conditions to ensure that water quality is protected, environmental damage is minimized, and other State requirements are satisfied.

The following activities do not require an application for Water Quality Certification:

- “Maintenance, replacement and repair" projects that are replaced in kind at the same location (refer to chapter discussing Corps permitting);
- Projects located in any state-regulated buffers of wetlands;
- Loss of Less than 5,000 Square Feet (Project Cumulative) of Wetlands with an Order of Conditions;
- Dredging Less than 100 Cubic Yards;
- Less than 5,000 Square Feet of Isolated Vegetated Wetlands.

The following activities require an application for a Water Quality Certification:

- More than 5,000 Square Feet of Wetland Loss;
- Any activity resulting in any discharge of dredge or fill material to any Outstanding Resource Water (waters within 400 ft. of public water supply reservoirs, certified vernal pools, and some Areas of Critical Environmental Concern);
- More than 5,000 Square Feet of Isolated Vegetated Wetlands;
- Any activity resulting in the discharge of dredged or fill material to an isolated vegetated wetland that has been identified as habitat for rare and endangered species;
- Any activity resulting in the discharge of dredged or fill material in any salt marsh. This would apply to the transmission and distribution lines located in salt marsh;
- Any activity subject to a Category II or Individual Section 404 permit from the Corps of Engineers.

3. MA WATERWAYS REGULATION PROGRAM (Chapter 91)

Massachusetts General Law Chapter 91(Chapter 91) regulates all structures that are located in, over, under or across waters of the Commonwealth. It also regulates dredge and fill activities in waters of the Commonwealth. The regulations promulgated to implement Chapter 91 are found in 310 CMR 9.00. These licenses continue to be legal documents with certain specifications and conditions. Changes or modifications to an area subject to a Chapter 91 license may require authorization from the Massachusetts Department of Environmental Protection (DEP) Wetlands and Waterways Division. When a water-crossing project is proposed at a National Grid facility, the Environmental Compliance Group permitting specialist should be contacted to identify whether the project requires Chapter 91 authorization.

With respect to National Grid facilities, Chapter 91 regulates all structures located in, over, under or across flowed tidelands and historical filled tidelands. All submerged lands lying below the "high water mark" of:

- The Connecticut River and the non-tidal portion of the Merrimack River in Massachusetts;
- "Great Ponds" (ponds with a surface area greater than ten acres in their natural state) - typically associated with National Grid transmission facilities;
- Electric power lines crossing Chapter 91 rivers - rivers and streams that have had local, state or federal money spent for flood control.

Maintenance ─ Chapter 91 Waterways regulations allow existing lawfully located structures and fills to be maintained to the original specifications of the license without notification or a new license.

Wire Crossings ─ A valid final Order of Conditions from the local Conservation Commission, coupled with no-loss of navigational space and constructed and maintained in accordance with the National Electric Safety Code, becomes the Chapter 91 authorization and the project does not require a separate Chapter 91 license. The NOI transmittal letter to the Conservation Commission should clearly state that the filing will also serve as the de facto Chapter 91 filing.

Determination of Jurisdiction ─ Since Chapter 91 licenses are legal, long-term documents, the Legal Department should be contacted to make determinations with respect to filings.

4. MA COASTAL ZONE MANAGEMENT (MCZM)

The MCZM Program Plan establishes program policies which embody coastal policy for the Commonwealth of Massachusetts. Recognition of these statements as Massachusetts coastal policy is formalized in various Memoranda of Understanding between MCZM and state environmental agencies. Projects subject to federal consistency review must be consistent with MCZM program policies. MCZM enforces its program policies through existing Massachusetts's statutes and their implementing regulations. MCZM also participates in the Massachusetts Environmental Policy Act

(MEPA) review process through which it identifies aspects of a proposed project that appear to be inconsistent with MCZM's program policies.

The Massachusetts coastal zone is a defined area extending landward 100 feet from certain specified roads or transportation lines and seaward to the extent of the Commonwealth's territorial sea (generally, but not always, three miles from shore) plus all of Barnstable County and the Islands. The coastal zone is mapped in the Coastal Atlas, copies of which are available at public libraries in coastal cities and towns, at MCZM's regional offices, and at the MCZM Office in Boston. Projects which are physically outside the coastal zone, but which may affect the land or waters uses or natural resources of the coastal zone may be subject to federal consistency review.

Examples of applicable federal licenses or permits, which trigger consistency review, include:

- Army Corps of Engineers (Corps) Section 404 and Section 10 permits;
- Environmental Protection Agency (EPA) National Pollutant Discharge Elimination System (NPDES) permits;
- Department of Transportation (DOT) Deep Water Ports Act Section 4 license, and River and Harbor Act Section 9 permit; and,
- Department of Energy (DOE)/ Federal Energy Regulatory Commission Section 301(b), Section 402(a)(1)(A) and 402(a)(1)(D) certifications and permits.

The complete list of MCZM program Policies and Management Principles are found at 301 CMR 21.98: Policy Appendix.

5. MA WATERSHED PROTECTION ACT

The Massachusetts Watershed Protection Act (MGL Chapter 92: Section 107A) and regulations (350 CMR 11.00) establish a system of controls regarding land use and associated activities which are designed to protect the water supplies associated with several central Massachusetts watersheds. The watersheds protected are Quabbin Reservoir, Ware River (upstream of the intake), and Wachusett Reservoir. The review and regulation of land use activities and/or actions affecting the water supplies is administered by the Metropolitan District Commission (MDC) Division of Watershed Management.

Areas regulated by the Act include lands within 400 feet of the Wachusett or Quabbin reservoirs and 200 feet of tributaries and surface waters. Within this "Primary Zone" any alteration is prohibited, including between 200 and 400 feet of the tributaries and surface waters and on land within floodplains, over some aquifers (to be determined by joint findings by the MDC and DEP), and within bordering vegetated wetlands (BVW); the "Secondary Zone", wherein certain activities are specifically prohibited; e.g., toxic/hazardous waste activities and alteration of the BVW, among others.

There are two exemptions that relate directly to Public Utilities.

- 11.05 (11) states that the maintenance, repair or expansion of lawfully located structures or facilities used in the service of the public to provide electric service is allowed. **Note:** This "exemption" is contingent upon a filing with the Division to obtain concurrence that water quality will not be materially impaired. An **approval** is required.
- 11.05 (12) states that the maintenance, repair or replacement, but not the substantial changing or enlarging of an existing and lawfully located structure or facility used in the service of the public to provide electric service is allowed. No filing is required; however, the Division has recommended to National Grid that a Request for Advisory Ruling be filed so they are aware of the activity.

The two types of filings most germane to National Grid are Advisory Rulings and Determination of Applicability:

- The Advisory Rulings are done via letter format and include such information as a description of the work, maps, deeds, plans, and other relevant information keyed to the request at hand. This filing is usually to determine jurisdictional matters**.**
- Most times a Determination of Applicability would be used as it is the primary documentation to ascertain whether the work being proposed would have a detrimental effect upon water quality.

6. MA STORM WATER MANAGEMENT

The MA DEP Storm Water Management Policy is designed to improve water quality and address water quantity problems by implementation of performance standards for stormwater management. The standards are designed for use under multiple statutory and regulatory authorities of the DEP, including the Wetlands Protection Act (WPA), as amended by the Rivers Protection Act, and the Clean Waters Act.

For new development or redevelopment, Conservation Commissions or the DEP will regulate stormwater through a WPA Order of Conditions by requiring conditions to meet certain performance standards. For point source discharges without a National Pollutant Discharge Elimination System (NPDES) permit, Conservation Commissions or the DEP will impose conditions on the quality and quantity of the stormwater discharge, provided the point source is within a resource area or buffer zone.

For existing discharges, the DEP will use watershed assessments and remedial action under the Clean Waters Act. Existing discharges include municipal storm sewer systems and drainage structures from developed areas with point sources to wetlands or water bodies.

The stormwater management policy is designed to control point source discharges. Point sources are closed or open point sources discharging to a waterbody or wetland. Unless a point source discharge exists from a construction site or operating facility, there is no jurisdiction. The regulations do not control overland, sheet flow. Note, however, that erosive features which may develop during construction are considered point sources as they serve to concentrate sheet flow into an open point source.

A Stormwater Management Program has been developed by the DEP to insure that proposed stormwater control designs meet the stormwater management standards and incorporated into the MA Wetlands Protection Act and 401 Certification regulations. Some aspects of the new regulations include development of a Pollution Prevention Plan (may use EPA SWPPP). Operations and Maintenance Plans are required with maintenance logs. Critical areas (e.g., Outstanding Resource Waters, vernal pools, drinking water supplies and tributaries) will receive closer scrutiny.
http://mass.gov/dep/water/wastewater/stormwat.htm

7. MA CONSTRUCTION DEWATERING

In Massachusetts' construction site dewatering of trenches or excavations subject to groundwater infiltration or storm water inflow with discharge to wetlands or surface waters is typically regulated under a NPDES General Permit for Construction Dewatering Facilities. This general permit was issued by EPA Region I on September 23, 2002 for the States of Massachusetts and New Hampshire (61 FR 19284).

Large construction projects with significant dewatering flows, sites subject to groundwater contamination, or discharges that contain other than ground or storm water may require a site-specific, individual NPDES permit from the EPA. Dewatering discharges to municipal or private storm sewer systems may also require the permission of the system owner.

For construction dewatering, a Wetlands Notice of Intent may be required under the Massachusetts Wetlands Protection Act if the dewatering is likely to change the water table, alter drainage characteristics or flow patterns, or affect water quality in a wetland resource area. However, routine maintenance and repair activities are generally exempt from the Act for legally existing electric, gas, water, and telecommunication services used in the service of the public.

Massachusetts requires that discharges covered by the construction general permit comply with the Massachusetts Wetlands Protection Act and applicable storm water performance standards required by State regulation or policy. Construction activities subject to 310 CMR 10.00 (wetlands) must obtain and comply with a Wetlands Order of Conditions issued by the local Conservation Commission with jurisdiction over the site where affected construction activities will take place (see Section 6.0, Storm Water Management - Massachusetts).

The following list includes examples of National Grid activities that may involve construction dewatering and as a result be subject to regulation under a NPDES permit or wetland rules:

- Any trenching, excavation or dredging for structures, equipment or transmission lines;
- Construction of foundations, support structures, etc.;
- Access road construction (associated drainage structures and other utilities);
- Manhole dewatering.

General Approach to Permit Authorization for National Grid Facilities - Construction Dewatering

- **For sites where construction activities are taking place, determine the overall size of the area to be disturbed.** If one acre or more is to be disturbed, and storm water may be a component of the construction

dewatering flow, coverage under the General Permit for Storm Water Discharges from Construction Activities will also be needed.

- **Determine if groundwater or soil contamination is likely to exist on site.** For construction sites with groundwater or soil contamination located in Massachusetts, Scott Pellerin at the EPA (617/918-8678) will rule on whether or not a temporary exclusion from the NPDES permitting process can be issued for the dewatering activity.
- **If no significant groundwater or soil contamination is likely to exist, file a Request for General Permit Coverage with the Massachusetts DEP at least 30 days prior to anticipated discharge.** The Request for General Permit Coverage is a brief form that is specific to each State. Information which must be generated to complete the form includes the number of discharge points, and the duration, volume, and rate of the discharge.

The applicant should submit a one-page form (Appendix D, BRP WM 10) available from the Massachusetts DEP Division of Watershed Management. In Massachusetts, the request form must be accompanied by a cover letter, a transmittal form and a check for $250. The transmittal form is available from the DEP web site at http://www.state.ma.us/dep/appkits/wm05_13.pdf (the request form is not available on- line at this time, but can be obtained by contacting Bob Kubit of the DEP at 508-767-2854 or robert.kubit@state.ma.us). This package should be sent to:

Massachusetts Department of Environmental Protection
Division of Watershed Management
627 Main Street, 2nd Floor
Worcester, MA 01608
Att: Bob Kubit

A copy of this package, less the transmittal form and fee should also be sent to the EPA:

EPA – New England, Region I
1 Congress Street, Suite 1100
Boston, MA 02114-2023
Att: Olga Vergara

Her phone number is 617.918.1519 and her fax number is 617.918.2064.

8. ARMY CORPS OF ENGINEERS

The Corps of Engineers has issued General Permits (PGP) for Massachusetts. Important points to remember when determining if a GP is required:

- The general permits shall not be used for piecemeal work and shall be applied to single and complete projects. If any crossing requires Category II review, then the entire linear project shall be reviewed as one project under Category II.
- The definition of Single and Complete Projects with respect to linear projects (e.g., power lines) applies to each crossing of a separate water of the U.S. at that location.
- Use of swamp mats is considered a discharge of fill material.
- Repair and maintenance work does not require filing as long as it is restricted to repair or maintenance of existing currently serviceable, previously authorized structures and fills with no expansion or change in use.
- Pre-application meetings with the Corps are recommended.

Self Verification (formerly Category 1)
Work that meets the definition of Self Verification, and that meets all of this permit's other conditions may proceed with using the Self Verification Notification Form at Section VII C of the GP notification to the Corps provided all other required Federal, state and local authorizations are obtained.

- Projects with less than 5,000 square feet of impacts;
- Unlimited square footage of swamp mats provided they are in place for less than one complete growing season (May 1 – Oct.1)
- In stream work limited to low flow period (July 1 – Oct.1);
- Bank stabilization less than 100 linear feet with and average of 1 cubic yard of fill per linear foot below ordinary high water;
- Repair or maintenance of existing, currently serviceable, authorized fills with no expansion or change in use.

The Corps reserves the right to require review projects if there are sufficient concerns for the aquatic environment or any other factor of overriding public interest. Also the applicant must comply with the National Historic preservation Act, Endangered Species Act, and the Wild and Scenic Rivers Act. Furthermore if there is a high likelihood of cultural/historical

resources, consultation with the MA Historical Commission or appropriate Indian Tribes (see Section VIII of the MA GP).

Pre-Construction Notification (formerly Category 2)
The Corps and other Federal resource agencies (U.S. Environmental Protection Agency, U.S. Fish and Wildlife Service, and National Marine Fisheries Service) and MA Coastal Zone Management program staff will screen projects that exceed the non-reporting thresholds for a case-by-case determination of applicability under this general permit. Activities that require screening by the federal agencies include:

- New fill discharges with impacts of 5,000 square feet to 1 acre;
- Temporary fill/excavations less than 1000 square feet in special aquatic sites excluding vegetated shallows;
- Bank stabilization greater than 100 up to 500 linear feet with and/or greater than 1 cubic yard of fill per linear foot below ordinary high water, or any amount with fill in wetlands;
- Replacement or repair of any non-serviceable structure and fills up to expansion to 1 acre, or with a change in use;
- Structures or work in or affecting tidal or navigable waters including utility lines, aerial crossings, and transmission lines, pipelines or outfalls.

Screened projects may not proceed until written notification is received from the Corps and the applicant receives the applicable approvals or waivers concerning water quality certification and coastal zone management consistency.

If a project requires filing a Notice of Intent (NOI) with the local Conservation Commission, a copy should be submitted to the Corps at the same time. The S106 process developed between National Grid and the Corps should be followed to complete the State Historic Preservation Office (SHPO) and the Tribal Historic Preservation Officers (THPOs) review for impact to registered historical properties or known archaeological sites within Corps Permit Area.

MA Individual Permit
Work in the Individual Permit category, or, activities that do not meet the terms and conditions of the general permit require an application for an Individual Permit from the Corps:

- New temporary or permanent fill discharges in wetlands, waterways including secondary impacts in excess of 1 acre;
- An EIS is required by the Corps;
- Temporary fill/excavations > 1 acre in special aquatic sites;
- Replacement or repair of any non-serviceable structure and fills greater than 1 acre.

9. NPDES STORM WATER PROGRAM

The NPDES Storm Water Program has been implemented in two phases:

- Phase I deals with municipal separate storm sewer systems (MS4s) serving populations of 100,000 or more people and construction activities that disturb 5 or more acres of land; and,
- Phase II deals with certain regulated small MS4s (i.e., urbanized areas) and construction activity that disturbs between 1 and 5 acres.

Maintenance projects are exempt from the permitting process providing that the project maintains the original grade and line, hydraulic capacity, or original purpose of the facility.

In Massachusetts, National Grid must comply with the following requirements in order to obtain coverage:

- A Notice of Intent (NOI) must be completed and submitted to EPA's NOI Processing Center. Once the NOI is received, it will be posted on the EPA's web site for 7 days. Please note that NOI's submitted electronically are automatically posted. NOI's submitted in hard copy must be administratively processed, potentially resulting in a delay of several days to weeks before the NOI is posted. Commencement of **any** earth-disturbing construction activity must not begin until the 7 day posting expires.
- Permittees may contact the NOI Processing Center at (301) 495-4145 to determine the status of a particular NOI.
- A Storm Water Pollution Prevention Plan (SWPPP) must be developed and implemented in accordance with the Construction General Permit *prior to submitting the Notice of Intent*.
- The applicant can submit a Notice of Termination when:
  - Disturbed soils have been stabilized and temporary erosion and sediment control measures have been removed (or will be removed at an appropriate time);

- Storm water discharges have been eliminated; or
- The permittee is no longer an operator of the site.

Storm Water Pollution Prevention Plan (SWPPP)

The contents of the SWPPP is given at FR Vol. 63, No. 31:7907. All SWPPPs should be based upon the SWPPP template which the Environmental Department has developed. **NOTE:** As of March 2008, many local communities must develop and implement local stormwater management programs. It is necessary to check with the municipal office to obtain such program requirements. The local programs are in addition to those administered by EPA and DEP.

Record of Change		
Date of Review/Revision:		
Revision	**Date**	**Description**
1	07/01/08	Added Record of Change.
2	01/13/11	Corrected EG reference in Section 1. Updated ACOE Category 1 project procedural changes per regulatory changes.
3	01/12/16	Updated Sections 1 and 8 based on recent regulatory changes.

SCOPE: This specification provides Environmental Procedures and Best Management Practices (BMPs) for work on electric and natural gas transmission and distribution rights-of-way (ROWs), fee-owned and easement, cross-country, and public/private roadways, as well as substations, company facilities and on customer-owned projects, and other facilities in New England.

Note that project-specific permits may have other BMPs/constraints that differ from this Environmental Guidance (EG). The projects shall be constructed in accordance with the project-specific permits and this specification. For maintenance work in New Hampshire, there is a state specific BMP manual which supersedes EG-303NE, where applicable[1]. For work in Vermont, there is a state specific BMP manual which may supersede EG-303NE, where applicable[2]. The Massachusetts Runoff, Erosion & Sedimentation Control Field Guide published by the Massachusetts Association of Conservation Commissions (MACC) is incorporated herein as a reference. The MACC Guide is intended as a supplement to EG-303NE and shall be superseded by EG-303NE in the case of an inconsistency or conflict.

PURPOSE: The purpose of this specification is to provide National Grid personnel, consultants and contractors with BMPs to support work that is protective of the environment and that complies with all applicable environmental laws, regulations and company policies and procedures. Environmental policies require the Company to avoid, minimize and mitigate negative impacts to the environment.

POLICY: These BMPs are to be effectively and consistently followed by all personnel accessing Company facilities, ROWs, and customer projects for inspection, maintenance and construction work purposes.

If there are any questions on this guidance, contact the local or project National Grid Environmental Scientist.

These BMPs do not apply to Company employees and contractors performing routine vegetation management activities that are not part of a construction or maintenance project. Employees and contractors maintaining vegetation on Company ROWs and substations shall follow the National Grid Right-of-Way Vegetation Management Plan; Right-of-Way Vegetation Management Specification; Substation, Switch Yard, and Pole Yard Vegetation Management Specification; and Right-of-Way Vegetation Mowing Specification. For more information regarding routine vegetation management, please contact a National Grid Forester.

[1] The "Best Management Practices Manual For Utility Maintenance In And Adjacent To Wetlands and Waterbodies in New Hampshire"
[2] Vermont DEC, 2006. The Vermont Standards and Specifications for Erosion Prevention and Sediment Control.

APPLICABLE REGULATIONS: Refer to Applicable Regulations in state-specific EG-301 documents.

CONTACTS: If there are any questions on this guidance, contact the National Grid Environmental Scientist.

1.0 Definitions

Refer to **Glossary in Appendix 1** and **Acronyms in Appendix 2**.

2.0 Project Planning

Prior to the start of any project (proposed new facilities or maintenance of existing facilities), the Project Engineer or other project planner shall determine whether any environmental permits or approvals are required, per the state-specific EG-301 environmental checklists. Any questions regarding which activities may be conducted in regulated areas or within environmentally sensitive areas shall be referred to the National Grid Environmental Scientist or Project Environmental Consultant

All new construction and maintenance projects shall follow clear and enforceable environmental performance standards, which is the purpose for which these BMPs have been compiled.

2.1 Avoidance and Minimization

Measures shall always be taken to avoid impacts to wetlands, waterways, rare species habitats, known below and above ground historical/archeological resources and other environmentally sensitive areas. If avoidance is not possible, then measures shall be taken to minimize the extent of impacts. Alternate access routes or staging areas shall always be considered. Below is a list of methods that shall be considered where impacts are unavoidable:

- Use existing ROW access where available. Keep to approved routes and roads without deviating from them or making them wider.
- Off-ROW access shall never be assumed and shall be coordinated through National Grid Real Estate before being implemented.
- Where no existing ROW access is present, avoid wetlands and if a wetland crossing is necessary, cross wetlands at the most narrow point possible or at the location of a previously used crossing (if evident). Figure 1 below illustrates this minimization technique.
- Avoid and minimize stream crossings;
- Minimize the width of typical access roads through wetlands to a maximum width of 16 feet;
- Conduct work manually (without using motorized equipment) in wetlands, wherever possible;

- Use swamp, timber, or similar mats in wetlands to minimize soil disturbance and rutting when crossing or working within wetlands. When not using mats for access, standard vehicles shall not be allowed to drive across wetlands without the prior approval of the National Grid Environmental Scientist. Use of a low ground pressure (LGP) vehicle may be a feasible alternative to mats provided that such LGP vehicle use has been reviewed and approved by the National Grid Environmental Scientist. See Section 8.5.
- Coordinate the timing of work to cause the least impacts during the regulatory low-flow period under normal conditions, when water/ground is frozen, after the spring songbird nesting season, and, outside of the anticipated amphibian migration window (mid-February to mid-June). The United States Army Corps of Engineers (USACE) defines the low-flow period as July 1 through August 30 in MA, July 1 through October 1 in RI, July 1 through October 1 in NH, and July 1 through October 1 in VT.
- Seek alternative routes or work methods to minimize impact.

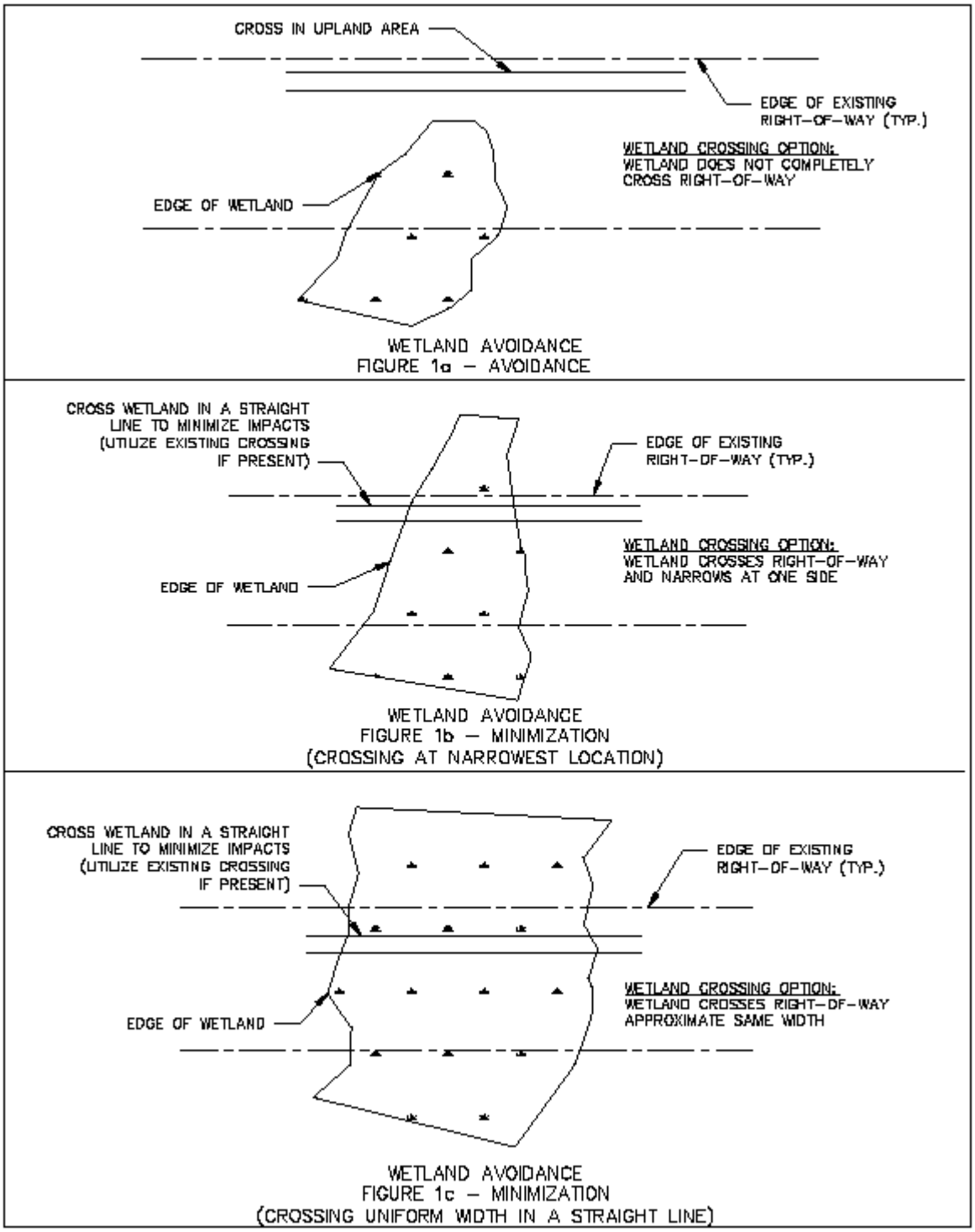
CROSS IN UPLAND AREA
EDGE OF EXISTING RIGHT-OF-WAY (TYP.)
WETLAND CROSSING OPTION:
WETLAND DOES NOT COMPLETELY CROSS RIGHT-OF-WAY
EDGE OF WETLAND
WETLAND AVOIDANCE
FIGURE 1a – AVOIDANCE
CROSS WETLAND IN A STRAIGHT LINE TO MINIMIZE IMPACTS (UTILIZE EXISTING CROSSING IF PRESENT)
EDGE OF EXISTING RIGHT-OF-WAY (TYP.)
WETLAND CROSSING OPTION:
WETLAND CROSSES RIGHT-OF-WAY AND NARROWS AT ONE SIDE
EDGE OF WETLAND
WETLAND AVOIDANCE
FIGURE 1b – MINIMIZATION
(CROSSING AT NARROWEST LOCATION)
CROSS WETLAND IN A STRAIGHT LINE TO MINIMIZE IMPACTS (UTILIZE EXISTING CROSSING IF PRESENT)
EDGE OF EXISTING RIGHT-OF-WAY (TYP.)
WETLAND CROSSING OPTION:
WETLAND CROSSES RIGHT-OF-WAY APPROXIMATE SAME WIDTH
EDGE OF WETLAND
WETLAND AVOIDANCE
FIGURE 1c – MINIMIZATION
(CROSSING UNIFORM WIDTH IN A STRAIGHT LINE)

2.2 Historically Significant Areas

Areas that have been identified as historically and/or culturally significant shall be avoided in accordance with site-specific avoidance plans, as applicable. Refer to the project-specific Environmental Field Issue (EFI) for any applicable avoidance plans or consult with the National Grid Environmental Scientist. Demarcation of these areas to be avoided shall use staked orange snow fencing or an equivalent physical barrier (not just ribbon flagging) and signage. Refer to Section 16.0 for signage guidance.

2.3 Rare Species Habitat

Work within areas that have been identified as mapped rare species habitat shall follow site-specific requirements, as applicable. In Massachusetts, maintenance activities within mapped habitat (known as Priority Habitat of Rare Species) shall follow the BMPs outlined in the Natural Heritage Endangered Species Program (NHESP)-approved National Grid Operation and Maintenance Plan. Work in mapped rare species habitat may require, at a minimum, turtle training for crews and sweeps of work areas for turtles, botanist identification of rare plant locations and avoidance of these locations, and protection of vernal pools, all prior to the start of work. Demarcation of these areas to be avoided (e.g., rare plant populations, overwintering turtles, nests) shall use staked orange snow fencing or an equivalent physical barrier (not just ribbon flagging) and signage. Refer to Section 16.0 for signage guidance.

Other requirements may apply in NH, VT and RI. Refer to the project-specific EFI for any applicable measures or consult with the National Grid Environmental Scientist.

2.4 Meetings

Pre-permitting meetings shall take place early in the project development process to determine what permits are triggered by the proposed work and the timeline required for permitting. During these meetings, the team shall develop access plans and BMPs to be used during construction of the project.

Field / Constructability review meetings shall take place on-site to evaluate construction site access and job site set-up, to ensure that the project can proceed as permitted. It is at this point in time where work areas, pulling locations, laydown areas, parking areas, and equipment storage areas are evaluated and located. Off-ROW areas under consideration should be included in this discussion.

Prior to submitting permit plans to regulatory authorities, the construction group (contractor or National Grid) shall review the plans for final sign off.

Pre-construction meetings are typically held prior to the commencement of all work to appoint responsible parties, discuss timing of work, and further consider options to avoid and/or minimize impacts to sensitive areas. These meetings can occur on- or off-site and shall include all the willing and available stakeholders (i.e., utility employees, contractors, consultants,

inspectors, and/or monitors, and regulatory personnel). Training of crews and supervisors of the EFI, Stormwater Pollution Prevention Plan (SWPPP), rare species, and other permit requirements shall be conducted at a pre-construction meeting.

Pre-job briefings shall be conducted daily or otherwise routinely scheduled meetings shall be conducted on-site with the work crew throughout the duration of the work. These meetings are a way of keeping everyone up to date, confirming there is consensus on work methods and responsibilities, and ensuring that tasks are being fulfilled with as little impact to the environment as possible.

The Project Environmental Scientist/Monitor and Construction Project Manager shall communicate regularly (e.g. weekly or bi-weekly meetings or phone conversations) to discuss the work completed since last communication (i.e. work locations, wetland impacts, equipment used, and unexpected delays or work conditions). These meetings or calls shall include the expected schedule of construction for the upcoming week, the long term construction plans, and planned methods for working near/in wetlands. Both the Project Environmental Scientist/Monitor and Construction Project Manager shall work together so the Project complies with all environmental permits and regulations. When changes to the Project scope or agreed work plan are proposed they shall be done so with the final approval of the National Grid Environmental Scientist.

2.5 Communication of Project Specific Environmental Requirements

Project specific requirements shall be communicated to the project manager/construction manager/engineering group using the following guidelines:

Environmental Field Issue – The EFI will be a full document consisting of narrative, project permits, access and matting plans. A table summarizing pertinent (but not all) permit conditions and the responsible party for those conditions shall be included in the EFI. Copies of all permits should be included as attachments. This will be prepared for most projects with multiple permits or large, complex projects (siting board, Section 404, 401 WQC, SWPPP). There should be EFI training at the pre-construction meeting. Appendix 3 is a sample EFI template

Simplified Environmental Field Issue – the simplified EFI is a memorandum containing project permit(s), access and matting plans and a table summarizing relevant permit conditions and responsible party for those conditions. Copies of all permits should be included as attachments. This will be prepared for most projects with 2 or more permits (Order of Conditions, S404 Cat 1). Appendix 4 is a sample simplified EFI template.

E-mail delivery of Permit and any Sediment/Erosion control or BMP plan – For those projects with only one permit (eg., MA Order of Conditions, RI DEM permit, RI CRMC permit, NH Utility Notification) or projects with a sediment & erosion control plan (local town requirement or for exempt maintenance work), a copy of the permit

and any applicable plan will be emailed to the PM (and the project team where deemed necessary) to be incorporated into the Construction Field Issue.

STORMS work management system input – for STORMS work, no EFI is prepared unless multiple permits are required for the project (see guidance above). If only a MA Order of Conditions, MA Determination of Applicability, RI DEM permit, RI CRMC permit, RI SESC Approval, or NH Utility Notification is required, then the permit is attached in Documents tab and conditions noted in Remarks/comments section. Appendix 5 contains standard STORMS boilerplate language.

2.6 Timing of Work

Regulatory authorities may place seasonal or time-of-year restrictions on project construction elements. These time-of-year restrictions may be state or permit-specific, and shall be adhered to.

Work during frozen conditions. Activities conducted once wetland areas are frozen sufficient to minimize rutting and other impacts to the surrounding environment may be authorized by the National Grid Environmental Scientist. Work during this time also generally reduces disturbance of aquatic and terrestrial wildlife movement by avoiding sensitive breeding and nesting seasons. When not using mats for access, vehicles shall not be allowed to drive across wetlands without the prior approval of the National Grid Environmental Scientist.

Work during the regulatory low-flow period. Conducting work during the low-flow period can reduce impacts to surface water and generally avoids spawning and breeding seasons of aquatic organisms. If the water is above normal seasonal levels, adjustments to work activities and methods are required.

2.7 Alternate Access

2.7.1 Manual Access

In some cases such as for smaller projects, work areas can be accessed manually. This includes access on foot through upland and shallow wetland areas, access by boat through open water or ponded areas, and climbing of structures where possible. Smaller projects, such as repair of individual structures, or parts of structures, that do not categorically require the use of heavy machinery, shall be accessed manually to the greatest extent practicable.

2.7.2 Use of Overhead/Aerial Access

Using helicopters can be expensive and is not always feasible, but it may be appropriate in some situations in order to get workers and equipment to a site that otherwise may be very difficult to access. The use of overhead and/or aerial equipment may be beneficial for work in areas where larger water bodies, deep crevices, or mountainous areas hinder ground access. The landing area for helicopters shall be reviewed for environmentally

sensitive resources. Use of helicopters requires Project Manager and Senior Management approval.

3.0 Inspection, Monitoring and Maintenance

All construction practices and controls shall be inspected on a regular basis and in accordance with all applicable permits and local, state, and federal regulations to avoid and correct ANY damage to sensitive areas.

The construction crews shall be responsible for completing daily inspections, and IMMEDIATELY bring any **damage or observed erosion, or failed erosion controls** to the attention of the Person-In-Charge and the National Grid Environmental Scientist. Where applicable and/or as directed by environmental permits issued for the project, the Project Environmental Consultant shall conduct weekly (at a minimum) inspections of the project work areas and shall document their inspection using the Stormwater, Wetlands & Priority Habitat Environmental Compliance Site Inspection / Monitoring Report form found in Appendix 6 and issue the report within 24 hours. The Person-in-Charge shall work with the National Grid Environmental Scientist and the Project Environmental Consultant to determine when and how the repairs shall be made.

Project-specific Action Logs and Long-Term Restoration Logs are prepared as needed by the National Grid Environmental Scientist or the Project Environmental Consultant to track issues and/or repairs and assign responsible parties.

4.0 Best Management Practices

The BMP sections presented in this EG address access, construction, snow and ice management, structures in wetlands, access road maintenance and repair, clean-up and restoration standards, ROW gates, field refueling and maintenance operations, management of spills/releases, and a summary of key construction BMPs.

Note that BMPs shown on any permit drawings for a specific project may need to be revised and or supplemented during the execution of a project based on unforeseen or unexpected factors such as extreme weather or unknown subsurface conditions. It is the responsibility of the Contractor to work with the National Grid Environmental Scientist and/or the Project Environmental Consultant to identify necessary changes and to ensure that construction-related impacts to wetlands, waterbodies and other environmentally sensitive areas are avoided.

Any deviation from the approved Best Management Practices shown in the EFI and/or SWPPP plans shall be communicated immediately to the National Grid Environmental Scientist as it may require additional permitting or could result in a permit violation.

4.1 Wetland Boundary Demarcation

Prior to the start of any activity conducted under an environmental permit, wetland boundaries shall be reviewed. Flagging for wetland boundaries, stream banks and other resource areas shall be refreshed as needed. This may become particularly important when the original flagging was placed in previous seasons and now may have become obscured.

4.2 Sedimentation and Erosion Controls

Appropriate sedimentation and erosion control devices shall be installed at work sites, in accordance with permit conditions and/or regulatory approvals, and as needed to prevent adverse impacts to water resources and adjacent properties.

The overall purpose of such controls is to prevent and control the movement of disturbed soil and sediment from work sites to adjacent, undisturbed areas, and particularly to water resources, public roads and adjacent properties. All proprietary controls shall be installed per manufacturer's recommendations and specifications.

Appropriate sedimentation and erosion control devices include but are not limited to: silt fencing, straw bales, wood chip bags, straw wattles, compost socks, erosion control blankets, mulch, slope interruption practices, flocculent powder/blocks and storm drain/catch basin inlet protection. Such controls shall be installed between the work area and environmentally sensitive areas such as wetlands, streams, drainage courses, roads and adjacent property when work activities shall disturb soils and result in a potential for causing sedimentation and erosion.

Staked straw bales often serve as the demarcation of the limits of work and/or sensitive areas to be avoided. Work shall never be conducted outside the limit of erosion controls without prior approval from the National Grid Environmental Scientist.

Project plans depict proposed erosion controls, however field conditions may warrant additional practices be implemented (e.g., wet conditions, frozen conditions, poorly drained soils, steep slopes, materials used for work pads, transition areas to swamp mats, number of trips across work areas, etc.).

Any deviation from the approved erosion controls shown in the EFI and/or SWPPP plans needs to be communicated immediately to the National Grid Environmental Scientist as it may require additional permitting or result in a permit violation.

Appendix 7 provides typical sketches of common sedimentation and erosion controls. If a SWPPP is required for the project, maintenance and inspection of erosion controls shall follow the SWPPP requirements. Sedimentation and erosion controls shall be properly maintained and inspected on a periodic basis, until work sites are properly stabilized and restored. Inspections

shall be documented using the Inspection Form "Storm Water, Wetlands & Priority Habitat Environmental Compliance Site Inspection/Monitoring Report" (**Appendix 6**).

The sequence and timing of the installation of sedimentation and erosion control measures is critical to their success. Sedimentation and erosion controls shall be installed prior to commencing construction activities that may result in any soil disturbance or cause otherwise polluted site runoff. Inspection of these devices may be required by the National Grid Environmental Scientist or by regulators prior to the start of work. The installation of water bars and other erosion control measures shall be installed shortly thereafter.

4.3 Concrete Wash Outs

Concrete wash outs shall be used for management of concrete waste. Concrete and concrete washout water shall not be deposited or discharged directly on the ground, in wetlands or waterbodies, or in catch basins or other drainage structures. Where possible, concrete washouts shall be located away from wetlands or other sensitive areas. Consult the National Grid Environmental Scientist on proposed concrete wash out locations prior to their use. Following the completion of concrete pouring operations, the wash outs shall be disposed of off-site with other construction debris. Refer to BMPs in Appendix 7.

4.4 Construction Activities in Standing Water

The use of silt curtains or turbidity barriers may be required when working in or adjacent to standing water such as ponds, reservoirs, low flowing rivers/streams, or coastal areas. Silt curtains and turbidity barriers prevent sediment from migrating beyond the immediate work area into the resource areas.

Coffer dams constructed using sheet piling or large sandbags (Trade names such as "the Big Bag" or "DamItDams") may be used to temporarily isolate and contain a work area in standing water.

When working in standing water, an oil absorbent boom, in addition to a silt curtain or other temporary barrier, shall be placed around the work area for spill prevention.

Work in drinking water reservoirs or other waters may require extensive regulatory agency review, even for maintenance work, which could result in additional time required for permitting, review and material procurement prior to the start of work.

4.5 Dewatering

Where excavations require the need for dewatering of groundwater or accumulated stormwater, the water shall be treated before discharge. Appropriate controls include dewatering basins, flocculent blocks, filter bags, filter socks, or weir tanks. Schematics of these BMPs are included as in Appendix 7. Water trucks or fractionation tanks may be utilized if watertight containers are desired for controlled on-site discharge or for off-site discharge into an approved dewatering area when site restrictions make it difficult to utilize other dewatering methods on-

site. Dewatering discharge water shall never be directed into wetlands, streams/rivers, other sensitive resource areas, catch basins, other stormwater devices, or substation Trenwa trenches. Dewatering flow shall be controlled so that it does not cause scouring or erosion through the use of a dewatering basin, filter sock, or equivalent. If it is determined that the chosen controls are not appropriately filtering the fine sediment from the dewatering pumpate then the National Grid Environmental Scientist shall be notified immediately and the controls shall be revised or supplemented.

When establishing a dewatering basin, consideration should be given to the anticipated volume of water and rate of pumping in determining the size of the dewatering basin. Dewatering basins shall be constructed on level ground. Once pumping commences, the basin shall be monitored frequently to assure that the rate of water delivery to the structure is low enough to prevent water from flowing, unfiltered, over the top of the basin walls. The basin shall be monitored throughout the dewatering process because the rate of filtration shall decrease as sediment clogs the filter fabric. If the basin is not appropriately filtering the fine sediment from the dewatering pumpate then the basin may need to be supplemented with a flocculent block. Field conditions shall dictate how often the basin should be inspected.

Distance to sensitive areas, direction of flow (toward or away from protected, or sensitive areas, such as wetlands, ponds, or streams), amount of vegetative ground cover between the basin and nearby sensitive areas, ground conditions (ledge, frozen, etc.), volume of water being pumped, and pump-rate, are some of the factors to be considered when determining an inspection frequency. Clogged filter fabric shall be replaced and accumulated sediment shall be removed as necessary from the basins to maintain efficacy.

Unattended dewatering shall never be allowed. If 24-hour dewatering is required for on-site construction activities, a designated attendee shall be trained by the National Grid Environmental Scientist.

Basins shall be cleaned and removed as soon as dewatering is complete. Sediment removed from the dewatering basin shall be allowed to dry before being disposed of by evenly spreading it over unvegetated upland areas where erosion is not a concern if clean or removing it from the site for proper disposal. Off-site trucking of wet soils is prohibited. The sediment disposal area shall be approved by the National Grid Environmental Scientist or the Project Environmental Consultant prior to use. Stabilization measures shall also need to implemented and approved by the National Grid Environmental Scientist or the Project Environmental Consultant. Soils/sediments shall be dewatered or mixed with dry material such that they are appropriate for off-site transport.

Any new dewatering location (not previously reviewed and approved by the National Grid Environmental Scientist during project planning or permitting) shall be reviewed and the discharge location approved by the National Grid Environmental Scientist before use.

Complex projects that require large scale dewatering shall require individual review by the National Grid Environmental Scientist and may trigger additional permitting.

Dewatering in areas of known chemical contamination may require a separate NPDES permit, or other approval, and treatment or containment system. Consult with the National Grid Environmental Scientist.

4.6 Check Dams

Check dams are a porous physical barrier installed perpendicular to concentrated storm water flow. They are used to reduce erosion in a swale by reducing runoff energy (velocity), while filtering storm water, thereby aiding in the removal of suspended solids.

Check dams should only be used in small drainage swales that shall not be overtopped by flow once the dams are constructed. These dams should not be placed in streams. Check dams are typically installed in ROWs or on other construction sites prior to the start of soil disturbing work. Per the Rhode Island Soil Erosion and Sediment Control Handbook, no formal design is required for a check dam if the contributing drainage area is 2 acres or less and its intended use is shorter than 6 months; however, the following criteria should be adhered to when specifying check dams.

- The drainage area of the ditch or swale being protected should not exceed 10 acres.
- The maximum height of the check dam should be 2 feet.
- The center of the check dam must be at least 6 inches lower than the outer edges.
- The maximum spacing between the dams should be such that the toe at the upstream dam is at the same elevation as the top of the downstream dam.

Per the NHDES stormwater manual, the use of check dams should be limited to swales with longitudinal slopes that range between 2 to 5 percent that convey drainage from an area less than 1 acre. Existing conditions that exceed these limitations should be assessed in the field and discussed with the National Grid Environmental Scientist to determine the viability of this BMP for the specific application. Check dams are often comprised of stone, straw bales, sand bags, or compost/silt socks. Use of check dams should be coordinated with the National Grid Environmental Scientist to ensure that the material selection, spacing and construction method are appropriate for the site. Check dams composed of biodegradable materials (e.g. straw bales or wattles, wood chip bags) may require periodic replacement for continued proper functioning[3]. Refer to BMPs in Appendix 7.

4.7 Water Bars

Water bars should be used on sloping ROWs to divert storm water runoff from unstabilized or active access roads when needed to prevent erosion. Surface disturbance and tire compaction

[3] Grass growth on a biodegradable type check dam is evidence that the material is decomposing. While this doesn't mean it is no longer functioning, it means it may be in a weakened condition and could potentially fail under high flow velocity. It is acceptable for grass to be growing on a stone check dam.

promote gully formation by increasing the concentration and velocity of runoff. Water bars are constructed by forming a ridge or ridge and channel diagonally across the sloping ROW. Each outlet should be stable. The height and side slopes of the ridge and channel are designed to divert water and to allow vehicles to cross. When siting water bars, consideration shall be given to the sensitivity of the area receiving the diverted runoff. For example, runoff should not be directed into a wetland, waterbody, other environmentally sensitive areas, or to private property or public roadways. Refer to BMPs in Appendix 7.

4.8 Retaining Walls

In some situations, retaining walls comprised of concrete blocks, gabions, boulders or other comparable materials may be required to stabilize the shoulder of existing access roads and/or supplement required erosion controls. Installation of such measures shall not be allowed as a maintenance activity. Should these controls be considered for a project, it shall be reviewed by the National Grid Environmental Scientist, as design and additional permitting may be required.

4.9 Slope Stabilization

Temporary slope stabilization practices help to keep exposed, erodible soils stabilized while vegetation is becoming established. Acceptable temporary slope stabilization practices may include the use of erosion control blankets, or hydraulic erosion control. Erosion control blankets, often comprised of natural fibers (e.g., jute, straw, coconut, or other degradable materials) are a useful slope stabilization, erosion control and vegetation establishment practice for ditches or steep slopes. Blankets are typically installed after final grading and seeding for temporary or permanent seeding applications. Hydraulic erosion control practices, including Bonded Fiber Matrix or hydroseed with a soil stabilizer (e.g., tackifier and/or mulch) may be an acceptable or desirable alternative form of temporary slope stabilization. For all practices, manufacturer's specifications should be followed for installation depending on slope and other field conditions. Consult the National Grid Environmental Scientist prior to selecting and installing any slope stabilization practices. Refer to BMPs in Appendix 7.

4.10 Maintenance of Sedimentation and Erosion Controls

Sedimentation and erosion controls shall be maintained in good operational condition during the course of the work. This includes , but is not limited to, replacing straw bales that are no longer in good condition, re-staking straw bales, replacing or re-staking silt fence, and removing accumulated sediment. Remove sediment before it has accumulated to one half the height of any exposed silt fence fabric, straw bales, other filter berm, check dams or water bars. Accumulated sediment shall be removed from sedimentation basins to maintain their efficacy. Manage the removed sediment by evenly spreading it over unvegetated upland areas where erosion is not a concern, by stockpiling and stabilizing, or by disposing of off-site. Stabilization measures shall also need to be implemented and approved by the National Grid Environmental Scientist or the Project Environmental Consultant. Where a SWPPP has been prepared for a specific site, the guidelines documented therein shall govern the management of sediment.

5.0 Right-of-Way (ROW) Access

Whenever possible, access shall be gained along existing access routes or roads within the ROW. However, in some cases there is no existing access. In many cases, temporary access can be utilized. The following practices provide general guidance on accessing a ROW. Check with a National Grid Environmental Scientist to determine if any environmental permitting is required before utilizing a temporary access.

National Grid operates substations and has cross-country ROW with overhead electric power lines in four New England States. MA, NH and RI also have transmission and distribution natural gas pipelines. Access is needed to substations, ROWs, and customer property, for inspection, maintenance and construction activities. Many projects are located in or near environmentally sensitive areas, such as rivers/streams, wetlands, floodplains, or rare species habitat, etc., which are protected from activities that may disturb these resources.

Note that the building of new roads or enlargement of existing roads is **prohibited** unless this activity is allowed by a project-specific permit, and the new roads appear on the Site Plans that were authorized in the regulatory approvals.

5.1 Off-ROW Access

Off-ROW access shall be evaluated for wetlands, rare species, cultural resources and other potential sensitive receptors, as applicable. National Grid Real Estate and Stakeholder Relations shall also be contacted as soon as possible once off-ROW access is determined to be needed.

5.2 Stabilized Construction Entrance/Exit for Access to ROWs from Public or Private Roads

A suitable (minimum 15-foot wide by 50-foot long) construction entrance/exit shall be installed at the intersection of the ROW access road/route with public/private paved roads, or other such locations where equipment could track mud or soil onto paved roads. The construction entrance/exit should be comprised of clean stone installed over a geotextile fabric. Geotextile fabric may be omitted for permanent construction entrances/exits on a case-by-case basis with the approval of the National Grid Environmental Scientist. Refer to BMPs in Appendix 7.

Construction entrance areas shall be monitored and maintained to ensure that stone or other material is not deposited onto the roadway, causing a safety concern. Where track-out of sediment has occurred onto a roadway, it shall be swept off the road by the end of that same work day.

If a construction entrance/exit is clogged with sediment and no longer functions, the sediment and stone may require removal and replacement with additional clean stone (clean stone refreshment) to ensure this tracking pad is performing its intended function adequately. Heavier traffic use may require this clean stone refreshment multiple times throughout a project. Reinforcement of these stabilized construction entrance/exits with asphalt binder or

asphalt millings is not likely to be considered "maintenance" and may trigger additional permitting requirements[4]. In some cases, heavily used construction entrances/exits may benefit from the installation of a 5-15 foot strip of asphalt binder or asphalt millings closest to the paved roadway to capture any stone that is tracked from the stone apron. Such cases shall be evaluated on an individual basis with the National Grid Environmental Scientist.

Once work is complete, the construction entrance/exit shall either be removed or retained, depending upon future maintenance-related access needs, property ownership, and/or project-specific approvals. If removed, the area shall be graded, seeded (if adequate root and seed stock are absent) and mulched. Proper approvals for leaving access roads in place shall be obtained; contact the National Grid Environmental Scientist and Property Legal.

5.3 Maintenance of Existing Access Roads

In many cases, the existing access road may need to be maintained to allow passage of the heavy equipment required for scheduled maintenance work. Access roads cannot deviate from the approved and permitted access plans. Maintenance of these roads may include adding clean gravel or clean crushed stone to fill depressions and eroded areas. This activity shall be conducted only within the width of the existing access road footprint and does not include widening existing access roads

If gravel begins to migrate onto the existing vegetated road shoulder, this gravel shall be removed during the project and/or after the completion of use of the road to ensure the road fill is not spreading into adjacent resource areas, or resulting in the road becoming much wider than its pre-existing or permitted condition. In some areas of mapped rare species habitat or other sensitive areas where project-specific permit conditions require the prevention of the migration of sediments into adjacent resources, an engineered stabilization system (e.g., GeoWeb or similar) may be suitable to prevent sedimentation while allowing for unrestricted wildlife migration.

Major reconstruction projects may require multiple permits. In all cases, the fill to be used for existing access roads shall be clean and free of construction debris, trash or woody debris. Use of processed gravel may be approved by the Person-In-Charge or the National Grid Environmental Scientist, on a case-by-case basis. If clean stone is used then addition of more erosion controls may not be necessary.

5.4 Maintenance of Existing Access Routes (Cross Country Routes)

Ruts and depressions along existing access routes and within the existing ROW may only be leveled and graded. Addition of fill or stone may require permitting as well as additional erosion controls, and needs to be approved by the National Grid Environmental Scientist

[4] Depending on the road, use of an asphalt binder or asphalt millings as a construction entrance/exit may trigger state or local permit requirements.

5.5 Maintenance of Existing Culverts

Damaged culverts may not be repaired or replaced without consulting with the National Grid Environmental Scientist to determine if a permit is required. For functioning culverts, care shall be taken to protect adjacent wetlands and watercourses by installing appropriate sedimentation and erosion controls around the downstream end of the culvert. Culverts shall be repaired/replaced in kind and shall not be changed in size unless approval has been obtained from the National Grid Environmental Scientist. In-kind replacement is replacement using the same material, functional inverts, diameter and length as the existing culvert. Changes to any of these characteristics shall require permitting. Installation of any **new** culvert is not allowed without obtaining all necessary permits first. Refer to BMPs in Appendix 7.

If, at the time of anticipated replacement, there is heavy flow through the culvert, the Person-In-Charge shall consult with the National Grid Environmental Scientist, to verify whether the culvert shall be replaced at that time. Water may need to be temporarily diverted during culvert repair/replacement. There typically are seasonal restrictions limiting both the replacement of existing culverts as well as installation of new culverts to the low-flow period. The low-flow period can vary from state to state. If any unexpected conditions are encountered during culvert replacement, the National Grid Environmental Scientist shall be contacted immediately prior to the work being completed for additional consultation.

5.6 Temporary Construction Access over Drainage Ditch or Swale

In some situations, construction access from paved roads onto ROWs may require the crossing of drainage ditches or swales along the road shoulder. In these situations, the installation of swamp mats, mat bridges or temporary culverts may facilitate construction access over the ditches or swales. These culverts shall be temporary only, sized for peak flow, and shall be removed after construction is complete. Consult with the National Grid Environmental Scientist prior to installation. In addition, if access over existing culverts may require extending the culvert, consult with the National Grid Environmental Scientist. Refer to BMPs in Appendix 7.

5.7 Construction Material along ROW

After preparing a site by clearing and/or installing any necessary erosion and sediment controls and prior to the start of construction, material such as poles, cross-arms, cable, insulators, stone and other engineered backfill materials may be placed along the ROW, as part of the project. The stockpiling of stone and other unconsolidated material on swamp mats shall be avoided, if determined necessary due to access and workpad constraints, the material must be placed on a geotextile fabric and be properly contained with a sedimentation barrier such as straw wattle. No construction material shall be placed in wetlands or other sensitive resource areas unless authorized by the National Grid Environmental Scientist or Project Environmental Consultant

6.0 Winter Conditions

6.1 Snow Management

DO NOT stockpile or dispose of snow in any water body, including wetlands, rivers/streams, the ocean, reservoirs, ponds, or stormwater catch basins. A buffer of at least 25 feet shall be maintained between any snow disposal area and any the high water mark of any surface water. A silt fence or equivalent barrier shall be securely placed between the snow storage area and the high water mark of rivers, streams, ponds, or the ocean. In addition to water quality impacts and flooding, snow disposed in surface water can cause navigational hazards when it freezes into ice blocks. Some state and local authorities have specific snow management requirements. Consult with the National Grid Environmental Scientist on specific restrictions.

DO NOT deposit snow within a wellhead protection area (e.g., a Zone II), in a high or medium-yield aquifer, or within 200 feet of a private well, where road salt may contaminate water supplies**. Consult with the National Grid Environmental Scientist to determine if a proposed disposal area is located within one of these sensitive areas.**

Avoid disposing of snow on top of storm drain catch basins or in storm water drainage swales or ditches. Snow combined with sand and debris may block a storm drainage system, causing localized flooding. A high volume of sand, sediment, and litter released from melting snow also may be quickly transported through the system into surface water and could also result in fines or a violation being assessed against National Grid.

All debris in a snow storage area shall be cleared from the site and properly disposed of no later than May 15 of each year.

Care shall be taken not to plow road materials away when removing snow.

6.2 De-Icing

Where allowed, calcium chloride is preferred as a de-icing agent when applied according to manufacturer's guidelines in upland areas. Sand shall be used on swamp mats through wetland areas.

Consult with the National Grid Environmental Scientist on de-icing agents when working in a facility or substation close to resource areas. Many municipalities have specific requirements for de-icing agents allowed within 100 feet of wetland resources and other sensitive areas.

6.3 Snow and Ice Management on Swamp Mats

Proper snow removal on swamp mats shall avoid the formation of ice. To avoid the formation of ice, snow shall be removed from swamp mats before applying sand. Prior to their removal from wetlands, sand shall be collected from the swamp mats and disposed of in an upland area. A round street sweeping brush mounted on the front of a truck may be an effective way to remove snow from swamp mats. Propane heaters may also be suitable solutions for snow removal and/or de-icing of swamp mats.

Once swamp mats are removed, wetlands shall be inspected for build up of sand that may have fallen through swamp mats. Care shall be taken to inspect wetland crossings as each mat is removed to ensure sand is properly removed and disposed of off-site.

7.0 Swamp Mats

The use of swamp mats allows for heavy equipment access within wetland areas. The use of swamp mats minimizes the need to remove vegetation beneath the access way and helps to reduce the degree of soil disturbance and rutting in soft wetland soils. Swamp mats most often used by National Grid are wooden timbers bolted together typically into 4-ft by 16-ft sections, wooden lattice mats, or composite mats. In some cases, swamp mats or other mats are used for staging or access in upland areas based on site conditions (e.g., agricultural field access). Refer to BMPs in Appendix 7.

Typically swamp mats may be installed on top of the existing vegetation, however in some instances cutting large woody vegetation may be required. Check with National Grid Environmental Scientist prior to cutting or clearing vegetation for swamp mat placement.

Follow the approved plans in the EFI for swamp mat installation and do not deviate from the plans. **Any deviation from the approved plans needs to be communicated immediately to the National Grid Environmental Scientist as it may require additional permitting, require stopping the project or result in a permit violation or revocation.**

7.1 Swamp Mats and Mowing

Close coordination with the mowing contractor shall be required to ensure that access plans are followed, and swamp mats are utilized when necessary. Sometimes mowing contractors may have to work off the leading edge of a swamp mat to mow in order to lay the next swamp mat and continue further into the wetland. Under no circumstances shall trees or shrubs be allowed to be pulled out of the wetland by the root ball. The root ball of trees and shrubs shall remain intact. Chipping debris and excessive amounts of slash shall not be placed in wetlands or other resource areas. In some instances, it may be beneficial to pile a reasonable amount of slash within a nearby upland area to create habitat for wildlife. This activity shall be approved by the National Grid Environmental Scientist.

7.2 Stream Crossings and Stream Bank Stabilization

Stream crossings shall be bridged with swamp mats or other temporary minimally-intrusive measures unless fording is acceptable for the site and is authorized by the National Grid Environmental Scientist. Care shall be taken when installing a swamp mat bridge to insure that the stream bed and banks are not damaged during installation and removal and that stream flow is not unduly restricted. An environmental permit may be required to cross or disturb protected waters, depending upon state-specific regulatory requirements. Refer to BMPs in Appendix 7. Immediately following swamp mat removal, all stream banks shall be stabilized and restored to prevent sedimentation and erosion.

7.3 Cleaning of Swamp Mats

Mats shall be certified clean by the vendor prior to installation. The vendor shall use the certification form provided as Appendix 8 to document compliance. Clean is defined as being free of plant matter (stems, flowers, roots, etc), soil, or other deleterious materials prior to being brought to the project site. Any equipment or timber mats that have been placed or used within areas containing invasive species within the project site shall be cleaned of plant matter (stems, flowers, roots, etc), soil, or other deleterious materials at the site of the invasive species prior to being moved to other areas on the project site to prevent the spread of invasive species from one area to another[5]. **Mats shall be cleaned prior to being removed at the completion of the project: exceptions to this requirement may be made on a case-by-case basis.** Consult with the National Grid Environmental Scientist prior to discharging or disposing of any waste water or waste material from the cleaning of swamp mats.

7.4 Stone Removal for Swamp Mat Placement

For situations where the matting contractor determines that stones or boulders must be removed or relocated within wetland areas in order to install safe and level structure work pads or access roads the boulders shall be moved in a manner which does not result in significant soil disturbance (i.e., pushing with a bull dozer is not allowed). The boulders shall not be placed on any existing vegetated areas within wetlands or within vernal pools. When numerous boulders shall be removed from a wetland area, they shall be deposited in an upland area outside of the flagged wetland limits, outside of any cultural resource areas and outside of any RTE species populations. Any boulders that shall be placed within buffers (In MA, the 100-foot buffer zone, and in RI, the 50-foot Perimeter Wetland, 100-foot or 200-foot Riverbank Wetlands) shall be placed to avoid causing soil disturbance and they shall be within an approved limit of work. When there is a significant number of boulders that shall be removed, the National Grid Environmental Scientist shall be consulted for guidance.

7.5 Transition onto Mats

Erosion controls and stone or wood chip ramps shall be installed to promote a smooth transition to and minimize sediment tracking onto swamp mats. Geotextile may be added beneath stone or wood chip transitions to facilitate removal, as necessitated by site or permit conditions. Mat transitions shall be removed once swamp mats have been removed and during restoration. Refer to BMPs in Appendix 7.

7.6 Corduroy Roads

Corduroy roads are a wetland crossing method where logs are cut from the immediate area and used as a road bed to prevent rutting from equipment crossing. This technique is designed to be used in areas of wetland crossings where there is no defined channel or stream flow and should never be used in streams. Corduroy logs shall be placed in the narrowest area practicable for crossing with the logs placed perpendicular to the direction of travel across wet area. The use

[5] On ROW projects where multiple wetlands may be dominated by the same invasive species, cleaning may not be required for movement along the ROW. Check with the National Grid Environmental scientist for guidance.

of corduroy logs shall only be in emergencies when approved by the National Grid Environmental Scientist or when they have been specifically permitted as part of a project. Refer to BMPs in Appendix 7.

7.7 Swamp Mat Removal

Once swamp mats are removed, wetlands shall be inspected for build up of sand or other materials that may have fallen through swamp mats. Care shall be taken to inspect wetland crossings as each mat is removed to ensure any materials are properly removed and disposed of off-site.

7.8 Bridging over other utility facilities

In ROWs where other utility facilities (including but not limited to gas, oil, fiber optic, electric, water, and sewer) are co-located within the transmission ROW, bridging may be required to cross those facilities. The project team shall coordinate with the respective utility company prior to determining if bridging or permanent crossings are required.

8.0 LGP Equipment Use

Only when approved by the National Grid Environmental Scientist on a case-by-case basis shall equipment with LGP of **less than 3 psi when loaded** be allowed to access through wetlands. The National Grid Environmental Scientist's approval of the use of LGP equipment through wetlands depends on several criteria including:

- Time of year. LGP equipment use may be allowed if weather and field conditions at the time of construction are suitable to eliminate/minimize the concern of rutting or other impacts. Frozen, frozen snow pack, low flow, or drought conditions are typically acceptable conditions. Spring and fall construction, due to the typical higher precipitation, are not suitable times of year for LGP equipment use.
- Number of trips. Multiple trips through a wetland have shown to increase the potential for damage and require matting. LGP equipment use shall likely only be approved if trips are limited to one trip in and one trip out.
- Type of wetland system. Some wetlands have harder soils/substrate, and may be passable without causing significant damage. Some of the wetlands along National Grid ROWs have existing hard bottom roads that have been vegetated over time and may be traversed with LGP equipment without swamp mats.
- Emergencies. LGP equipment use may be allowed during emergency or storm conditions for outage restoration.
- State-specific USACE General Permit Performance Standards. The standard is for no impact to the wetland, which may be obtained by using LGP equipment (<3 psi **when loaded**). "*Where construction requires heavy equipment operation in wetlands, the equipment shall either have low ground pressure (<3 psi), or shall not be located directly on wetland soils and vegetation; it shall be placed on swamp mats that are adequate to*

support the equipment in such a way as to minimize disturbance of wetland soil and vegetation."

- Local bylaws. Municipal wetland bylaws, where applicable, shall be reviewed for prohibitive conditions or applicable performance standards.

LGP equipment approval is required **at the time of construction for each wetland crossing** and shall be dependent upon the above conditions. In addition, LGP equipment use and approval shall be assessed by the National Grid Environmental Scientist during construction on a continuing basis; LGP equipment use shall cease immediately if field conditions are found to be unsuitable. ***Please note that if LGP vehicles are used, and wetlands damage occurs, the use of the LGP equipment shall be suspended.***

9.0 Soil Disturbing Activities

9.1 Dust Control

Water or application of calcium chloride or other National Grid approved equivalent in accordance with the manufacturer's guidelines may be used for dust control along ROWs in upland areas. During application of water for dust control, care shall be taken to ensure that water does not create run-off or erosion issues. Refer to BMPs in Appendix 7.

9.2 Clearing

Clearing is not allowed without specific permission as it constitutes soil disturbance under several regulatory programs and may trigger permitting by increasing the project's footprint of disturbance. If clearing is required for a project, the limit of clearing shall be established with flagging or construction fencing and/or erosion controls. Clearing shall be done in accordance with project specific permits. Following the completion of clearing, the limits of work shall be re-established. Refer to BMPs in Appendix 7.

9.3 Grubbing

Grubbing is not allowed without specific permission as it constitutes soil disturbance under several regulatory programs and likely triggers permitting by increasing the project's footprint of disturbance. If grubbing is required for a project, the limit of grubbing shall be re-established after clearing has been completed. The area of grubbing shall be identified with flagging or construction fencing and/or erosion controls. Grubbing shall be conducted in accordance with project-specific permits.

9.4 Blasting

If blasting is anticipated, the project team, including the National Grid Environmental Scientist, shall be consulted.

9.5 Site Grading

The work site shall not be graded other than in accordance with project permits. Any proposed grading shall be reviewed by the National Grid Environmental Scientist for wetlands, rare

species habitat, areas of cultural and historical significance, and other environmentally sensitive areas prior to start of work. In some cases, additional testing for cultural or historical resources may be triggered by proposed grading; alternatives to grading may be sought due to protracted time frame of obtaining the permit associated with testing and performing the testing. Grading outside of a regulated area shall be kept to the minimum extent necessary for safe and efficient operations and shall comply with the project permit plans.

Grading shall be performed in a manner which does not increase the erosion potential at the Site (e.g., terraces or slope interruptions shall be utilized). Graded sites shall be promptly stabilized by applying a National Grid approved seed mix (if adequate root and seed stock are absent), and mulching with hay, straw or cellulose (use straw or cellulose hydromulch where the potential introduction of invasive plant species is of concern) to reduce erosion and visual impact, as soon as possible following completion of work at the site. Grading within a regulated area shall be subject to the review and approval of the National Grid Environmental Scientist.

In some municipalities, site grading activities require the prior approval of the Town Engineer, Building and Zoning Official, or Public Works Director. Local ordinances or bylaws should be reviewed for applicable restrictions and permitting thresholds

9.6 Site Staging and Parking

During the project planning and permitting process, locations shall be identified for designated crew parking areas, material storage, and staging areas. Where possible, these areas should be located outside of buffer zones, watershed protection areas, and other environmentally sensitive areas. Any proposed locations shall be evaluated for all sensitive receptors and for new projects requiring permitting, shall be incorporated onto permitting and access plans.

9.7 Soil Stockpiling

Soil stockpiles shall be located in upland areas and, if in close proximity to wetlands and wetland buffers, shall be enclosed by staked straw bales or another erosion control barrier. The stockpiling of stone, drill spoils and other unconsolidated material on swamp mats shall be avoided unless determined necessary due to access and work pad constraints. Additional controls, such as watertight mud boxes and geotextile/filter fabric over or between swamp mats shall be considered for stockpile management. If material is placed on swamp mats and falls through into wetlands, the material must be removed by hand. Saturated soils shall be allowed to dewater prior to off-site transport for sufficient time to ensure that water/sediment is not deposited onto swamp mats or public roads during transport.

9.8 Top Soil/High Organic Content Soil

When the work site requires excavation and grading, the top soil shall be stockpiled separately from the material excavated. This top soil shall be spread as a top dressing over the disturbed area during restoration of the site.

In some instances where work is occurring within wetlands, high organic content soil may be displaced. Such high organic content soil shall be segregated from other excavated materials and stockpiled for use in wetland restoration areas. Care shall be taken to minimize the handling of high organic content soil. Preferably, the soil shall be stockpiled in one location until it is moved to the restoration area.

10.0 Stone Wall Dismantling and Re-building

Removal or alteration of stonewalls shall be avoided, whenever possible. As appropriate, some stonewalls removed or breached by construction activities shall be repaired or rebuilt. Rebuilt stone walls shall be placed on the same alignment that existed prior to temporary removal, to the extent that it shall not interfere with operations. The removal and rebuilding of stone walls requires approval from the National Grid Environmental Scientist and Property Legal, and may require several weeks lead time for coordination. Note that not all states allow this technique. Dismantling may not be allowed at all due to quality or significance of the wall. Once a stone wall has been identified as requiring dismantling, the following procedures shall be followed:

- Identify stone wall that is required to be temporarily dismantled and notify project team that a site visit is warranted to review the stone wall.
- The National Grid Environmental Scientist, with support from Property Legal and/or cultural/historical consultant, shall determine if permitting or additional permissions are required prior to dismantling stone wall.
- Once permit or permissions have been received, full documentation of wall dimensions (measurements and photographs) shall be submitted to the National Grid Environmental Scientist. Documentation of the wall dimensions shall be marked onto a copy of the applicable EFI access plan (or equivalent plan) with a useful reference for future locating such as GPS coordinates and/or measurement from a permanent reference point (closest structure location or closest cross street, etc.). The wall shall be photographed from all sides with a written description of the photograph (i.e. southern side of wall looking north). In addition, documentation of the length of wall to be dismantled shall be recorded. Take special care to note if granite property bounds (or other marker) are located within the wall so additional survey can be accomplished prior to dismantling in cases where the stone wall represents a property boundary. Site visits by project team (which shall include the National Grid Environmental Scientist) are a mandatory requirement prior to dismantling.
- No dismantling shall take place until documentation has been submitted to the National Grid Environmental Scientist and approved as sufficient documentation.
- Stones from the wall shall be removed from the work area and temporarily stored in nearby location, away from wetlands; buffer zones; rare species habitat and other historical/archeological concerns.
- Avoid dismantling via the “bulldozer” method when possible as this method makes it nearly impossible to rebuild the wall in the same alignment due to its uncontrolled nature.

Dismantling shall be conducted either by hand, with stones stacked as they are removed, or on less "sensitive" walls to use an excavator with a thumb to grab each stone and build a stockpile. Significant ground disturbance below the wall shall be avoided.

Once construction and access in the area has been completed, the wall shall be rebuilt to pre-dismantled conditions or better. If rebuilding a stone walls can not be placed on the same alignment that existed prior to temporary removal, approval from the National Grid Environmental Scientist and Property Legal is required. **Note that if the wall represents a legal property boundary or is historically or culturally significant (or was previously determined to be in a very high quality condition), a professional stone masonry company may be required to document wall alignment, and conduct the dismantling and rebuilding**

11.0 Avian Nest Removal

Avian nest removal shall be done in accordance with EG-304. Consult the National Grid Environmental Scientist prior to removing any nests. There are seasonal restrictions of the removal of avian nests and federal or state permits may be necessary prior to removal

12.0 Drilling Fluids and Additives

Notify the National Grid Environmental Scientist if drilling fluids/additives are proposed to be used on a project. Use and disposal of spent drilling fluids/slurries shall be approved by the National Grid Environmental Scientist, as regulatory approvals and drinking water wells may be of concern. Deactivation and sampling may be required prior to disposal.

13.0 Grounding Wells

The installation of grounding wells shall require erosion controls and proper soil management. Due to the typical depth required for grounding wells (typically 50 to 200 feet or more), erosion controls shall be installed around the proposed well location when working in buffer zone, in proximity to sensitive resources or near slopes. Also, dewatering basins may be required for the proper management of groundwater. The National Grid Environmental Scientist shall be consulted for the disposal of any excess soil.

14.0 Counterpoise and Cathodic Protection

The installation of counterpoise or cathodic protection shall require erosion controls and proper soil management. The National Grid Environmental Scientist shall be consulted for the disposal of any excess soil.

15.0 Gates

When not in use, gates shall be locked with a company-approved lock or double locked with the property owner's lock. New gates may be installed during a project, however, installation

of a gate requires permission from the property owner, and may require environmental permitting. Consult with National Grid Real Estate and the National Grid Environmental Scientist prior to installing a new gate, as well as with the appropriate engineering department for the current company gate specifications. Refer to BMPs in Appendix 7. Installation of ROW access restrictions (e.g., stone, bollards, other) at road crossings also require consultation with the National Grid Environmental Scientist and Property Legal.

16.0 Signage

Specific signage may be required by permits or be specified in the EFI to limit access in certain sensitive areas. Signs shall be used to clarify allowed access and sensitive areas, such as:

- "No snow stockpiling beyond this point,"
- "Approved access (to structures A-F)";
- "Do not cross this area until swamp mats are in place";
- "No vehicle crossing";
- "Areas to avoid"; and
- "Environmentally Sensitive Area – Keep Out."

Signs shall be used in conjunction with snow fencing or other physical barriers as demarcation for sensitive areas (e.g., rare species areas, sensitive archeological locations, etc.) that need to be protected and avoided by construction activities. In addition, permit signs required by the regulatory agencies shall be present (i.e. MADEP, RIDEM, EPA (SWPPP), ACOE, etc) at construction sites and/or ROW access points. Construction signage shall be installed and maintained by the contractor performing the work during the project. Absence of signage does not eliminate the need to comply with access plans, permit conditions, and other regulatory requirements. Refer to BMPs in Appendix 7.

17.0 Refueling and Maintenance Operations

17.1 Spill Prevention and Response Plan

Spill controls shall be provided on every field vehicle. Bulk storage of fuels (55 gallons or greater) shall be approved by the National Grid Environmental Scientist prior to being brought on site. The need for a field spill plan shall be evaluated specific to the project for regulatory requirements under SPCC regulations or local ordinances. A field spill plan would include information on fuels and oils being used, approximate amounts in each container or type of equipment, location, fueling location, secondary containment, response and notification procedures, including contact phone numbers, etc. All personnel shall be briefed on spill prevention and response prior to the commencement of construction. The state-specific EG-501 and EG-502 shall be followed in the event of a spill.

Typical construction activities do not require the use or storage of large quantities of oil or hazardous materials (i.e., greater than 55 gallons). However, oil and/or hazardous materials (OHM) may be required in limited quantities to support construction or vehicle operations. Best

practices shall be followed in the use and storage of OHM which include but are not limited to: storage and refueling greater than 100 feet from resource areas; maintenance of spill response equipment at work locations sufficient to handle incidental releases from operating equipment; general training for on-site personnel for spill clean up response for incidental releases of OHM; and contracting with an on-call spill response contractor that is capable of managing incidental and significant releases of OHM. There may situations that additional precautions shall be required for the storage or use of OHM (i.e., within wellhead protection areas, GA/GAA areas, Zone IIs). Storage of OHM shall be done in accordance with any applicable regulatory requirements.

17.2 Field Refueling

When refueling vehicles, Company personnel or contractors at field locations shall bring vehicles or equipment (except for fixed equipment such as drill rigs) to an access area outside of environmentally sensitive areas (such as waterways, wetlands, buffer zones or drinking water sources), or as specified in permit conditions and the EFI. A paved area such as a parking lot or roadway is preferred, to minimize the possibility of spill or release to the environment. The driver shall take all usual and reasonable environmental and safety precautions during refueling, such as connecting a safety grounding strap between the fuel tank and vehicle or equipment being refueled. The driver shall frequently check for fuel spills, drips, or seeps during the refueling operation.

Small equipment such as pumps and generators shall be placed in small swimming pools or on absorbent blankets/pads, to contain any accidental fuel spills. Small swimming pools with absorbent blankets/pads, and/or other secondary containment, shall be used for refueling of fixed equipment in wetlands and should be maintained to prevent accumulation of precipitation.

17.3 Grease, Oil, and Filter Changes

Routine vehicle maintenance shall not be conducted on project sites.

17.4 Other Field Maintenance Operations

When other vehicle or equipment maintenance operations (such as emergency repairs) occur, company personnel or contractors at field locations shall bring vehicles or equipment to an access location a minimum of 100 feet away from environmentally sensitive areas (e.g., wetlands or drinking water sources). A paved area, such as a parking lot or roadway, is a preferred field maintenance location to minimize the possibility of spills or releases to the environment.

Crews shall take all usual and reasonable environmental precautions during repair or maintenance operations. Occasionally, it is infeasible to move the affected vehicle or equipment from an environmentally sensitive area to a suitable access area. When this situation occurs, precautions shall be taken to prevent oil or hazardous material release to the environment. These precautions include (but are not limited to) deployment of portable basins or similar secondary containment devices, use of ground covers, such as plastic tarpaulins, and precautionary placement of floating booms on nearby surface water bodies.

17.5 Tools and Equipment

Cleaning of tools and equipment shall be conducted away from environmentally sensitive areas (such as wetlands, buffer zones or drinking water sources) to the maximum extent possible. A paved area such as a parking lot or roadway is preferred, to minimize the possibility of spill or release to the environment. Crews shall wipe up all minor drips or spills of grease and oil at field locations.

18.0 Stabilization Deadlines for Projects Subject to EPA Construction General Permit

18.1 Deadlines to Initiate Stabilization Activities (Permanent and Temporary)

Soil stabilization measures shall be implemented immediately whenever earth-disturbing activities have permanently or temporarily ceased on any portion of the project. The following are some examples of activities that constitute initiation of stabilization:

- Preparing the soil for vegetative or non-vegetative stabilization;
- Applying mulch or other non-vegetative product to the exposed area;
- Seeding or planting the exposed area;
- Finalizing the arrangements to have stabilization product fully installed in compliance with the deadlines to complete stabilization in Section 18.2 below.

18.2 Deadlines to Complete Stabilization Activities (Permanent and Temporary)

As soon as practicable, but no later than 14 calendar days or 7 calendar days (for areas discharging to a sensitive water) after the initiation of soil stabilization measures commence the following should be completed:

- For vegetative stabilization, all activities necessary to initially seed or plant the area to be stabilized; and
- For non-vegetative stabilization, the installation or application of all such non-vegetative measures.

18.3 Vegetative Stabilization (all except for arid, semi-arid, or on agricultural lands)

- Provide established uniform vegetation (e.g., evenly distributed without large bare areas), which provides 70% or more of the density of coverage that was provided by vegetation prior to commencing earth-disturbing activities. Avoid the use of invasive species as cover.
- For final stabilization, vegetative cover must be perennial; and
- Immediately after seeding or planting a disturbed area to be vegetatively stabilized, a non-vegetative erosion control must be implemented to the area while the vegetation is becoming established. Examples include; mulch and rolled erosion control products.

18.4 Vegetative Stabilization (Agricultural Lands)

- Disturbed areas on land used for agricultural purposes that are restored to their pre-construction agricultural use are not subject to vegetative stabilization standards.

18.5 Non-Vegetative Stabilization

If using non-vegetative controls to stabilize exposed portions of your site, or if you are using such controls to temporarily protect areas that are being vegetatively stabilized, you must provide effective non-vegetative cover to stabilize any such exposed portions of the site. Examples of non-vegetative stabilization techniques include, but are not limited to, rip-rap, gabions, and geotextiles.

19.0 Clean-up and Restoration Standards

The following steps shall be taken once construction has been completed at each location along the ROW or within the project site. The following are minimum guidelines for clean-up and stabilization standards. Please refer to permit conditions for project-specific related standards. Refer to the EFI for applicable permit requirements andto determine if the site needs to be reviewed and approved by the permitting authorities prior to removal of erosion controls.

19.1 Removal of Sedimentation and Erosion Controls

After all work has been satisfactorily completed and vegetation has been re-established to a minimum of 75% cover, and upon approval by the National Grid Environmental Scientist, all non-biodegradable materials (e.g., siltation fencing, straw bale strings, stakes, straw wattle mesh casing, etc.) shall be disposed of properly off-site.

Dependent on permit requirements, sedimentation and erosion controls may not be allowed to be removed until after inspection and approval by one or more permitting authority. In most cases, removed straw bales may be used to mulch disturbed areas. Remaining straw bales that do not block the flow of water may be left in place unless they are required to be removed pursuant to permit conditions. Straw bales that block the flow of water shall be removed.

Prior to project construction being completed, the project team will develop post-construction inspection intervals to ensure timely removal of temporary BMPs. BMPs will be removed when the area is stabilized, which typically occurs when the area has either naturally stabilized (75 % cover), or seed and mulch that was installed has achieved 75% cover.

19.2 In-Situ Restoration

Unless otherwise specified in permits or prescribed by the National Grid Environmental Scientist or the Project Environmental Consultant, all disturbed areas, including stream banks, wetlands and access routes, shall be restored following the completion of work. When the work is completed and swamp mats have been removed, the National Grid Environmental Scientist or Project Environmental Consultant shall conduct an inspection. Wetlands shall be inspected for build up of sand or other materials that may have fallen through swamp mats. Care shall be taken to inspect wetland crossings carefully after swamp mat removal to ensure any materials are properly removed and disposed of off-site.

Restoration of Soil Compaction. If rutting or soil compaction following swamp mat removal is observed, the area shall be returned to pre-existing conditions, and comparable to the surrounding area, by light hand raking or by back-blading with machinery. Restoration shall be overseen by the Project Environmental Consultant or National Grid Environmental Scientist. Deep ruts (>12") shall be filled in using available, loose soil from the work area.

Seeding and Mulching. If adequate root and seed stock are absent and have been stripped from the area, graded sites shall be promptly stabilized by applying an approved seed mix and mulching with straw to reduce erosion and visual impact. Seeding and mulching shall be completed as soon as possible following completion of work at the site. For some wetland areas, natural re-vegetation may be more appropriate than seeding disturbed sites. Wetland areas where adequate root and seed stock are absent will be seeded using an approved wetland native seed mix. For some wetland areas, natural re-vegetation may be more appropriate than seeding disturbed sites. Refer to BMPs in Appendix 7 for seed mix tables and mulch ratio tables.

If needed, the import of quality topsoil onto the ROW will be required. Topsoil should be tested, and approved by the Project Environmental Consultant or National Grid Environmental Scientist to determine its suitability for site conditions. Fertilizers will be approved on a case-by-case basis.

For upland areas, the disturbed vegetation and soil shall be restored and stabilized[6] by regrading the area to pre-existing conditions, if needed, seeding (if adequate root and seed stock are absent) and mulching the exposed soil, and removing strings and stakes from straw bales and using broken up straw bales for the mulch. Siltation fencing, strings and stakes shall be removed for disposal as ordinary waste. Refer to BMPs in Appendix 7 for seed mix tables and mulch ratio tables.

Excess boulders. Additional boulders could be used at proposed and existing gate locations to use on either side of the gates as a deterrent for unauthorized vehicle access or be placed along the edges of work pads where steep slopes are present for safety purposes. The final placement of boulders should be reviewed prior to installation with Stakeholder Relations and the National Grid Environmental Scientist or Project Environmental Consultant.

Unless otherwise specified in Project-specific permit conditions, the National Grid Environmental Scientist or Project Environmental Consultant shall develop an inspection frequency to monitor restored areas for stabilization, germination and successful revegetation.

19.3 Invasive Species

All equipment shall be certified clean[7] utilizing the attached form (Appendix 8) or equivalent as approved by by the vendor prior to mobilization to the work site. The vendor shall use the certification from provided as Appendix 8 to document compliance with invasive species management BMPs, Clean is defined as being free of plant matter (stems, flowers, roots, etc), soil,

[6] For projects subject to the 2012 CGP, stabilization is required within 14 days, or within 7 days for sensitive areas.
[7] The Appendix 8 certification form (or equivalent as approved by National Grid Environmental scientist) shall be used to document the clean certification

or other deleterious materials prior to being brought to the project site. Any equipment that has been placed or used within areas containing invasive species within the project site shall be cleaned of plant matter (stems, flowers, roots, etc), soil, or other deleterious materials at the site of the invasive species prior to being moved to other areas on the project site to prevent the spread of invasive species from one area to another[8]. **Equipment shall be cleaned prior to being removed at the completion of the project: exceptions to this requirement shall be determined on a case-by-case basis.** Consult with the National Grid Environmental Scientist prior to discharging or disposing of any waste water or waste material from the cleaning of equipment.

19.4 Cleaning of Equipment

At the completion of the project, Equipment shall be cleaned prior to being de-mobilized to prevent tracking of material onto roads and causing safety issues. Consult with the National Grid Environmental Scientist prior to discharging or disposing of any waste water or waste material from the cleaning of equipment

19.5 Access Routes (Cross Country Routes)

Cross country access routes shall be returned to pre-construction grade (if needed), seeded (if adequate root and seed stock are absent) and mulched. Pre-existing sandy soils within mapped rare turtle habitat shall not be seeded unless directed by the National Grid Environmental Scientist so as to not alter nesting habitat.

19.6 Access Roads

Constructed gravel roads shall be left in place following project completion unless permit conditions require their removal. Refer to the specific permit conditions for these provisions. If the road is to be removed, the crushed stone and geotextile fabric shall be removed from the work site. This excess material can be retained off-site for future maintenance-related access needs. Seeding and/or mulching of gravel roads is generally not required, unless necessary to prevent erosion.

19.7 Stone Work Pads

Unless permit conditions or property owner's require the removal of constructed stone work pads following project completion, constructed work pads shall be left in place. Refer to the specific permit conditions for these provisions.

19.8 Construction Materials on ROWs

As soon as the structure work has been completed, all used parts and trash are to be picked up and removed from the project site. Retired poles shall be removed in accordance with National Grid Engineering Standard SP,06.01.301. In some cases, the used material from structure work may be temporarily stored at the work area by placing it out of the wetlands or other sensitive resource area until work in the adjacent areas has been completed. However, treated wood poles shall never be stored in standing water or in wetlands. If the project is cancelled, all material shall be removed

[8] On ROW projects where multiple wetlands may be dominated by the same invasive species, cleaning may not be required for movement along the ROW. Check with the National Grid Environmental scientist for guidance.

from the project site. Excess material brought to the project site shall be removed upon project completion. Consult with the National Grid Environmental Scientist on whether the work site shall be restored in addition to the measures outlined in 8.14.1 to 8.14.5 above

19.9 Improved Areas

Yards, lawns, agricultural areas, and other improved areas shall be returned to a condition at least equal to that which existed at the start of the project. Alternately, if requested, the property owner may be reimbursed to perform their own restoration, after the site has been left in an environmentally sound manner. If this option is requested, it shall be documented in a written release signed by the property owner. Consult with National Grid Real Estate and/or Stakeholder Relations for the details on existing agreements. Off-ROW access shall never be assumed and shall be coordinated through Real Estate before being implemented. Depending on the access point, swamp matting, composite matting or other BMPs may be required to prevent ruts, lawn damage, or other property damage. Restoration following the completion of work and any use of improved areas shall be conducted in accordance with 8.14.2 above

19.10 Property Damage

All damage to property occurring as a result of a project shall be immediately repaired or replaced. In some locations, it may be desirable to document pre-existing damage prior to work commencing in that area in order to demonstrate afterwards that the damage did not result from the project. Work crews, the Project Environmental Consultant or the National Grid Environmental Scientist shall document repairs that were performed in response to damage from unauthorized vehicle use.

19.11 Overall Work Site

Upon satisfactory completion of work, the construction personnel shall remove all work-related trailers, buildings, rubbish, waste soil, temporary structures, and unused materials belonging to them or used under their direction during construction, or waste materials from previous construction and maintenance operations. All areas shall be left clean, without any litter or equipment (wire, pole butts, anchors, insulators, cross-arms, cardboard, coffee cups, water bottles, etc.) and restored to a stable condition and as near as possible to its original condition, where feasible. Debris and spent equipment shall be returned to the operating facility or contractor staging area for disposal or recycling (cardboard) as appropriate in accordance with EG-111.

19.12 Material Storage/Staging and Parking Areas

Upon completion of all work, all material storage yards, staging areas, and parking areas shall be completely cleared of all waste and debris. Unless otherwise directed or unless other arrangements have been made with an off ROW or off-property owner, material storage yards and staging areas shall be returned to the condition that existed prior to the installation of the material storage yard or staging area. Regardless of arrangements made with a landowner, all areas shall be restored to their pre-construction condition or better. Also any temporary structures erected by the construction personnel, including fences, shall be removed by the construction personnel and the area restored as near as possible to its original condition, including seeding and mulching as needed.

20.0 Notification of Emergency Work

Because it is sometimes difficult to identify wetlands and other sensitive environmental areas, the National Grid Environmental Scientist shall be notified within 24 hours or by the next working day whenever emergency off-road repair work takes place. Although the routine maintenance and emergency repair work is generally allowed, due to site conditions or the scope of the project, notification to the regulating agencies may be required

21.0 Appendices

APPENDIX 1: Glossary
APPENDIX 2: Acronyms
APPENDIX 3: EFI Template
APPENDIX 4: Simplified EFI Template
APPENDIX 5: Standard STORMS boilerplate language
APPENDIX 6: Storm Water, Wetlands & Priority Habitat Environmental Compliance Site Inspection / Monitoring Report Form
APPENDIX 7: BMP Drawings and Guidelines

APPENDIX 8: Certification Sheet for Invasive Species Control

Appendix 1 – Glossary

Access Road – An existing, periodically maintained road often consisting of gravel and/or exposed soils or vegetated with grasses but devoid of woody vegetation, that is visible on aerial photography and shown on ROW T-sheets. May include newly permitted permanent roads (i.e., roads to be constructed in accordance with a project-specific permit).

Access Route - A pathway previously used or proposed to be used by crews for access along the ROW. Routes may be shown on ROW T-sheets or previous project access plans but are not improved as maintained gravel/exposed soil roads. Access routes may be mown and can consist of trails utilized by recreational vehicles.

Action Logs – Project-specific log used to document action items required for permit compliance. The log identifies timeframes for completion and responsible parties. The log is typically updated by the Project Environmental Consultant or the National Grid Environment Scientist and circulated to the project team on a weekly, or more frequent, basis.

Bank – The transitional slope immediately adjacent to the edge of a surface water body, the upper limit of which is usually defined by a break in slope, or, for a wetland, where a line delineated in accordance with applicable state and federal regulations that indicates a change from wetland to upland.

BMP – Best Management Practice. Individual engineered constructions or operating procedures intended to minimize and mitigate soil disturbance, erosion, sedimentation, turbid discharges, and/or impacts to sensitive receptors.

Clean - free of plant matter (stems, flowers, roots, etc), soil, or other deleterious materials prior to being brought to the project site.

Clean Gravel – Gravel is a type of coarse-grained soil that consists of small stones and other mineral particles. Clean Gravel shall meet the requirements in accordance with National Grid Standard Construction Specification for Electric Stations (Engineering Standard SP.08.00.001) Clean Gravel will not have fine materials that could lead to a turbid discharge.

Clean Stone (Crushed Stone) – Clean Stone (Crushed Stone) shall meet the requirements in accordance with National Grid Standard Construction Specification for Electric Stations (Engineering Standard SP.08.00.001). Clean Stone will not have fine materials that could lead to a turbid discharge.

Clearing – The cutting of trees and large bushes by hand and/or mechanical means.

Compost Socks – Tubular devices comprised of non-degradable, photodegradable, or biodegradable mesh tubing containing organic compost matrix. Compost socks are effective for intercepting site runoff, trapping sediment, and treating for soluble pollutants by filtering stormwater runoff. .

Compost socks are a useful sedimentation control device along construction site perimeters, as check dams in drainage channels, as a slope interruption practice on long and/or steep slopes, and around drain or street curb inlets.

Corduroy Road – Corduroy roads are cut trees and/or saplings with the crowns and branches removed, and the trunks lined up next to one another.

Dewatering Basin – An established containment area for saturated materials and pumped discharges. This measure is used for the purpose of de-watering soils prior to transport off site or for use in another location on site, and for allowing suspended sediment to settle out of pumped discharges.

Detention/Retention Basin – A detention/retention basin is designed for the purpose of detaining or retaining water. A dewatering basin is a form of detention basin

Dewatering – Use of a system of pumps, pipes and temporary holding dams to drain or divert waterways or wetlands, or lower the groundwater table before and during excavation activities.

Drainage Ditch or Swale – a clearly noticeable channel that is typically dry, except after precipitation events. Intermittent and perennial streams and rivers are not included in this definition.

Dredge – To dig, excavate, or otherwise disturb the contour or integrity of sediments in the bank or bed of a wetland, a surface water body, or other area within the regulating bodies' jurisdiction.

Dredge Spoils – Material removed as the result of dredging.

Embankment – A protective bank constructed of mounded earth or fill materials located between a roadway (or rail bed) and a seasonal stream or other wetland.

Environmental Field Issue – Document that contains copies of all project-specific environmental permits and summarizes all environmental permit conditions. The EFI is prepared by the Project Environmental Consultant or the National Grid Environment Scientist and copies are provided to the Project Manager, Construction Supervisor(s), and other team members as appropriate.

Environmental Monitoring Records – Examples of checklists and/or monitoring reports suggested for use by the Company Environmental Engineer to document conformance of the project with this Environmental Guidance and or project specific permit/license conditions.

Environmental Scientist – Formerly Environmental Engineer. The National Grid Environmental Department representative for the project or the territory where the work is located. For a map of Environmental Department staff territories, refer to the Environmental page of the National Grid infonet.

Environmentally Sensitive Areas – Examples of environmentally sensitive areas that may be found on National Grid properties are rivers, streams, ponds, lakes, wetlands, bogs, swamps, salt marshes, rare species habitat, wellhead protection areas, cultural sites, parks, preserves, schools and as otherwise defined by Federal, State or local regulations. Refer to EG-301.

Erosion Controls – The utilization of methods to prevent soil detachment and minimize displacement or washing down slopes by rainfall or run-off. Common practices include, but are not limited to:

(a) Temporary and Permanent Seeding

(b) Mulching, Soil Binders, Tackifiers

(c) Erosion Control Blankets

(d) Hydraulic Erosion Control

Excavate/Excavation – To dig, remove, or form a cavity or a hole in an area within the department's jurisdiction.

Fill (n.) – Any rock, soil, gravel, sand or other such material that has been deposited or caused to be deposited by human activity.

Fill (v.) – To place or deposit materials in or on a wetland, surface water body, bank or otherwise in or on an area within the jurisdiction of the department.

Flats – Relatively level landforms composed of unconsolidated mineral and organic sediments usually mud or sand, that are alternately flooded and exposed by the tides and that usually are continuous with the shore.

Frozen condition – Field conditions when the upper portion of the ground surface freezes or when areas of standing water freeze solid such that vehicle passage over these areas is supported without any resulting soil disturbance. The frozen conditions must have been affected by severe cold (maximum daily temperatures less than 32 degrees F) for a continuous 2-week period.

GAA – Rhode Island groundwater classification, groundwater resources that are know or presumed to be suitable for drinking water use without treatment and are located in one of the three areas described below.

a) The state's major stratified drift aquifers that are capable of serving as a significant source for a public water supply ("groundwater reservoirs") and the critical portion of their recharge area as delineated by DEM;

b) The wellhead protection area for each public water system community water supply well. Community watrer supply wells are those that serve resident populations and have at least 15 service connections or serve at least 25 individuals, e. g. municipal wells and wells serving nursing homes, condominiums, mobile home parks, etc.; and

c) Groundwater dependent areas that are physically isolated from reasonable alternative water supplies and where existing groundwater warrants the highest level of protection. At present only Block Island has been designated as meeting this criterion..

GA – Rhode Island groundwater classification, groundwater resources that are know or presumed to be suitable for drinking water use without treatment. However, groundwater classified by GA does not fall within any of the three priority areas described under the GAA classification.

Grade/Grading – The movement of soil and fill material to change the elevation of the land. The term refers to the combined actions of excavating and filling to change elevation or shape.

Grubbing – The removal of stumps/roots by mechanical means during site preparation activities.

Immediately - As soon as practicable, but no later than the end of the next work day, following the day when the earth-disturbing activities have temporarily or permanently ceased.

In-kind replacement - replacement using the same material, functional inverts, diameter and length as the existing item. In-kind replacement includes the substitution of a structure with a similar structure in approximately the same location as is practicable, and is approximately the same in design. The design may be altered to meet applicable utility standards, and may include alternate materials designed to prolong the life of that service.

Intermittent Stream – A stream that flows for sufficient time to develop and maintain a defined channel, but which might not flow during dry portions of the year.

In the Dry – Work done either during periods of low water or behind temporary diversions, such as Earth Dike / Drainage Swale and Lined Ditches designed and installed in accordance with best management practices.

Limit of Work/Disturbance – The approved project limits within regulated areas. All project related activities in regulated areas must be conducted within the approved limit of work/disturbance. The limit of work/disturbance shall be depicted on the approved permit site plans and in the EFI plans. Where it is warranted National Grid may require that these limits be identified in the field by flagging, construction fencing, and/or perimeter erosion controls.

Long-Term Restoration Logs - Project-specific log used to document restoration required following the completion of construction or as areas of the project have been completed (i.e., segments of ROW for a multi-mile project). The log is typically updated by the Project Environmental Consultant or the

National Grid Environment Scientist Environment Scientist and circulated to the project team on a weekly basis.

Low Flow Conditions – Low water flow that generally occurs during the summer, as a result of decreased precipitation and the removal of water by increased evaporation and evapotranspiration by vegetation. Work done under low-flow conditions minimizes the potential for environmental damage. The USACE defines the calendar dates for low flow conditions in its New England state-specific Programmatic General Permits.

Low Ground Pressure – equipment that meets the regulatory requirement of < 3 Pounds per Square Inch (PSI) ground pressure when loaded. Use of LGP equipment ***requires approval*** from the National Grid Environmental Scientist.

Marsh – A wetland:

a) That is distinguished by the absence of trees and shrubs;

b) Dominated by soft-stemmed herbaceous plants such as grasses, reeds, and sedges; and

c) Where the water table is at or above the surface throughout the year, but can fluctuate seasonally.

Methods – Are the construction practices and procedures that take place through choosing the proper equipment, trucks and labor to execute the earth moving activities based on the existing conditions and implementing creative and sensitive scheduling for the daily activities.

NHESP - Natural Heritage Endangered Species Program; a department within the Massachusetts Division of Fisheries and Wildlife that is responsible for protecting the 176 species of vertebrate and invertebrate animals and 259 species of native plants that are officially listed as Endangered, Threatened or of Special Concern in Massachusetts.

Perennial – A stream that contains water at all times except during extreme drought.

Permanently Ceased – Is applicable to earth disturbance activities when clearing and excavation within any area of the Project that will not include permanent structures has been completed.

Person-in-Charge – A National Grid Project Engineer, Manager, Supervisor, Field Construction Coordinator or equivalent Contractor personnel assigned to oversee and coordinate work activities.

Processed Gravel – Processed Gravel shall meet the requirements in accordance with National Grid Standard Construction Specification for Electric Stations (Engineering Standard SP.08.00.001) Processed Gravel will not have fine materials that could lead to a turbid discharge. Gravel consisting of inert material that is hard, durable stone and is free from loam and clay, surface coatings and deleterious materials.

Regulating Body – Federal, State, or local authority that has jurisdiction over resource areas that may be impacted by company operations

Regulated Wetland Area – Those areas that are subject to federal, state or local wetland regulation, including certain buffer or adjacent areas.

Repair – The restoring of an existing legal structure by partial replacement of work, or broken, or unsound parts (Env-Wt 101.73).

Replacement – The substitution of a new structure for an existing legal structure with no change in size, dimensions, location, configuration, construction, or which conforms in all material aspects to the original structure

Right-of-Way – A corridor of land where National Grid has legal rights (either fee ownership, lease or easement) to construct, operate, and maintain an electric power line and/or natural gas pipeline and may include work on customer owned properties.

River – A watercourse that is larger than a perennial stream and flows all year long.

Routine Utility Rights-of-Way Maintenance Activity – Includes but is not limited to vegetation management and repair or replacement of existing utility structures.

Sedimentation Controls – Silt fences, straw bales, compost socks/berms and other barrier devices strategically placed to intercept and treat sediment-laden site runoff.

Sensitive Water - Includes any sediment or nutrient impaired water or a water that is identified by the state, tribe or EPA as Tier 2, 2.5 or Tier 3 for antidegradation purposes.

Siltation Curtain – An impervious barrier erected to prevent silt and sand and/or fines from being washed into a wetland, surface water body or other area of concern.

Surface Water Body or Surface Waters – Those portions of waters which have standing or flowing water at or on the surface of the ground.

Spill Prevention, Control and Countermeasure Plans – Required for site operations that involve the storage of 1,320 gallons or greater of fuel and oils, both in storage containers and stored in equipment. Response actions to spills and releases are specified in these plans.

Swamp Mats – Components of a temporary wood, plastic or other suitable material used as a BMP to cross sensitive areas or provide a stable working surface.

Stormwater Pollution Prevention Plan – A site-specific, written document that, among other things: (1) identifies potential sources of stormwater pollution at a construction site; (2) describes stormwater control measures to reduce or eliminate pollutants in stormwater discharge from a construction site;

and (3) identifies procedures the operator will implement to comply with the terms and conditions of EPA NPDES Construction General Permit (CGP). SWPPPs must be prepared, maintained on-site, and amended as necessary in order to obtain NPDES permit coverage for specific construction site stormwater discharges under the EPA NPDES CGP.

Temporarily Ceased - Is applicable when there are earth disturbance activities such as clearing, grading, and/or excavation that are not complete, but will be idle in one area for a period of up to 14 or more calendar days, and which will resume in the future. The 14 calendar day timeframe begins as soon as you now that construction work on a portion of the Project will be left incomplete and idle. In circumstances where there are unanticipated delays and you do not know at first how long the work stoppage will continue, the requirement to immediately initiate stabilization is triggered as soon as you know with reasonable certainty that work will be stopped for 14 or more additional calendar days.

Tidal Wetlands – A wetland whose vegetation, hydrology or soils are influenced by periodic inundation or tidal waters.

Topsoil – The uppermost part of the soil, ordinarily moved in tillage, or its equivalent in uncultivated soils and ranging in depth from 2 to 10 inches.

Turbidity – The condition in which solid particles suspended in water make the water cloudy or even opaque in extreme cases.

United States Geological Survey topographic map – A map that uses contour lines to represent the three-dimensional features of a landscape on a two-dimensional surface. These maps use a line and symbol representation of natural and artificially created features in an area.

Wetland – An area that is inundated or saturated by surface or ground water at a frequency and duration sufficient to support, and that under normal conditions does support, a prevalence of vegetation (more than 50 percent) typically adapted for life in saturated soil conditions (hydric soils). Wetlands include but are not limited to swamps, marshes, bogs, and similar areas.

Work Site – An area where work is performed.

Worker – Company employee, contractor, consultant working on site.

Zone II - Massachusetts - That area of an aquifer which contributes water to a well under the most severe pumping and recharge conditions that can be realistically anticipated (180 days of pumping at safe yield, with no recharge from precipitation). It is bounded by the groundwater divides which result from pumping the well and by the contact of the aquifer with less permeable materials such as till or bedrock. In some cases, streams or lakes may act as recharge boundaries. In all cases, Zone IIs shall extend up gradient to its point of intersection with prevailing hydrogeologic boundaries (a groundwater flow divide, a contact with till or bedrock , or a recharge boundary).

Appendix 2 – Acronyms

ASTM	American Society for Testing and Materials
BMP	Best Management Practices
EFI	Environmental Field Issue
EG	Environmental Guidance
EPA	Environmental Protection Agency
GA/GAA	Rhode Island Groundwater Classifications – see glossary
LGP	Low Ground Pressure
MA	Massachusetts
MA DEP	Massachusetts Department of Environmental Protection
MassDOT	Massachusetts Department of Transportation
NE	New England
NH	New Hampshire
NH DES	New Hampshire Department of Environmental Services
NHESP	Natural Heritage Endangered Species Program
NPDES	National Pollutant Discharge Elimination System
OHM	Oil and/or Hazardous Materials
PSI	Pounds per square inch
RI	Rhode Island
RI DEM	Rhode Island Department of Environmental Management
RI CRMC	Rhode Island Coastal Resources Management Council
RI SESC	Rhode Island soil erosion and sediment control
ROW	Right-of-Way
RTE	Rare, Threatened or Endangered
SPCC	Spill Prevention, Control and Countermeasure
SWPPP	Storm Water Pollution Prevention Plan
TOY	Time-of-Year
USACE	United States Army Corps of Engineers
USGS	United States Geological Survey
VT	Vermont
VT DEC	Vermont Department of Environmental Conservation

Zone II Massachusetts Groundwater Protection district – see glossary

Appendix 3 – EFI template

See EG303NE_Form1 for the EFI template

Appendix 4 – Simplified EFI template

See EG303NE_Form2 for the Simplified EFI template

Appendix 5 – Standard STORMS boilerplate language

See EG303NE_Form3 for examples of standard STORMS boilerplate language

Appendix 6

National Grid
Storm Water, Wetlands & Priority Habitat Environmental Compliance
Site Inspection / Monitoring Report

Project Name: Date:

City / Town: Time:

WO/WR #

Distribution Alliance Contractor Project? ☐ No ☐ Yes Identify Contractor

Current Weather Conditions:

Precipitation Since Last Inspection (Date, Est. Duration and Est. Amount from Each Storm):

Activities/Structures/Locations Inspected:

Identify Locations/Activities/Structures Within Designated Priority Habitat (Identify Rare Species Observations, if any) and Mitigation/Restoration Measures Implemented:

Any Significant Discharges of Sediment to Water Bodies or Wetlands? (If "yes," state locations):

Page 2

Compliance with SWPPP Storm Water Controls, O&M Plan, Order of Conditions or Other Applicable Environmental Requirements? (Explain if "no" for any feature inspected):

Additional BMPs or Other Corrective Action Needed and, if so, Where?

Page 3

Compliance with Previous Observations?

Are Spill Control Supplies Available? ☐ Yes ☐ No

Are Oil and/or Hazardous Materials Stored On-Site? ☐ Yes ☐ No

If So, Are They Properly Labeled and Managed? ☐ Yes ☐ No

Are Wastes Stored On-Site? ☐ Yes ☐ No *If So, Are They Properly Managed?* ☐ Yes ☐ No

Miscellaneous (e.g., dumping?):

Comments:

Name:

Title/ Company:

Reference: EG-303NE

Appendix 7 – BMPs

See EG303NE_Form4 for a list of BMPS

See EG303NE_Form5 for BMP details

APPENDIX 8
CERTIFICATION FORM FOR INVASIVE SPECIES CONTROL

Certain permit conditions, therefore a Condition of Contracts for the Prime Contractor, any Subcontractors, and any equipment or mat vendors for ***National Grid Projects*** shall be required to Certify their equipment[9] {each piece of equipment used on site} as 'clean'[10].

_____ (*name of firm*) hereby Certifies that

_____ (*make, model, and/or type*)

_____ (*equipment ID tag or #)* meets the following

1. before entry on to the job site, has been sufficiently cleaned to remove all accumulated mud, debris, plant fragments, and detritus that could harbor seeds, roots, or plant fragments of so-called invasive plant species; and

2. that the above piece of equipment has neither been off-loaded nor operated in the interval between cleaning and delivery to the jobsite.

3. that equipment deployed in areas of invasive species (as identified in project plans) shall be cleaned prior to redeployment

_____ (*signed*) _____ (*dated*)

_____ (*printed name*) _____ (*title*)

_____ (*Firm*)

The signed original of this form {one for each piece of equipment (or lot[11] of mats)} is to be given to the NG Field Construction Coordinator assigned to the project.

---

9 Equipment may include, but is not limited to bulldozers, excavators, backhoes, bucket trucks (tracked or wheeled), pulling equipment, concrete trucks, compressors, drilling equipment, and mats (composite, wood, or other materials).

10 With regard to invasive species, the definition of clean means free of accumulated mud, debris, plant fragments, and detritus that could harbor seeds, roots, or plant fragments of so-called invasive plant species.

11 Lot of mats is the number of mats that may be transported by one forwarder/truck at a time.

Record of Change		
Date of Review/Revision:		
Revision	**Date**	**Description**
0	1/23/12	Issued New England Specific EG-303 NE
1	04/22/13	Stone wall dismantling edits.
2	1/23/14	added bmp # 39, edited text on p40 to reference form1 and form2
3	08/29/14	Added section on communication of project specific environmental requirements (2.5), added appendices for EFI, simplified EFI, and STORMS boilerplate language. Added language concerning removal of BMPs (18.1). Minor edits to BMP details, and renumbered appendices. Added swamp mat transition, mat air bridge and silt sack BMP details.
4	2/5/15	Adding additional language about signage and demarcation of rare species populations and historic resources.
5	07/01/2015	Revised construction entrances/exits (5.2) per R170 audit findings.
6	09/28/2015	Added 4.1 (Refreshing of wetland flagging), revised 9.7 (stockpiling on mats), added 18.0 (stabilization deadlines) revised 19.2 (in-situ restoration), and edited BMP details (straw wattle, seeding options), added rock ford detail.

	BMP #	Measure
Sediment & Erosion Controls	1	Weed free bale barrier
	2	Sediment control fence
	3	Silt fence / weed free barrier
	4	Silt Soxx
	5	Straw Wattle
	6	Erosion Control Blanket - Ditch
	7	Erosion Control Blanket - Slope
	8	Hydroseeding with Tackifier (slope stabilization)
	9	Mulch materials, rates and uses (from NY)
	10	Seeding options - Upland Seed Mixes
	11	Seeding options - Wetland Seed Mix
Crossing Measures	12	Prefabricated mats
	13	Mat bridge
	14	Swamp mat layout (with transition)
	15	Swamp mat layout (with transition and BMPs)
	16	Swamp mat - Air Bridge
	17	Corduroy road
	18	Rock Ford
	19	Temporary construction entrance / exit
	20	Temporary construction culvert
	21	Access way stabilization
	22	Construction signage
Advanced Applications	23	Reinforced silt fence
	24	Sediment filter
	25	Stone check dams
	26	Straw / haybale check dam
	27	Waterbar
	28	Sandbag check dam
	29	Earth dike
	30	Drainage swale and lined ditch
	31	Sedimentation basin
	32	Dewatering basin - Small scale
	33	Dewatering basin - Large scale
	34	Dirtbag
	35	Concrete waste sump
	36	Outpak concrete washout
	37	Barrier fence (construction fence)
	38	ROW gates / fences
	39	Bollard
	40	Dust control
	41	Catch Basin Inlet Protection
	42	Silt Sack
	43	Turbidity Curtain

BMP DETAIL

SCALE: NONE

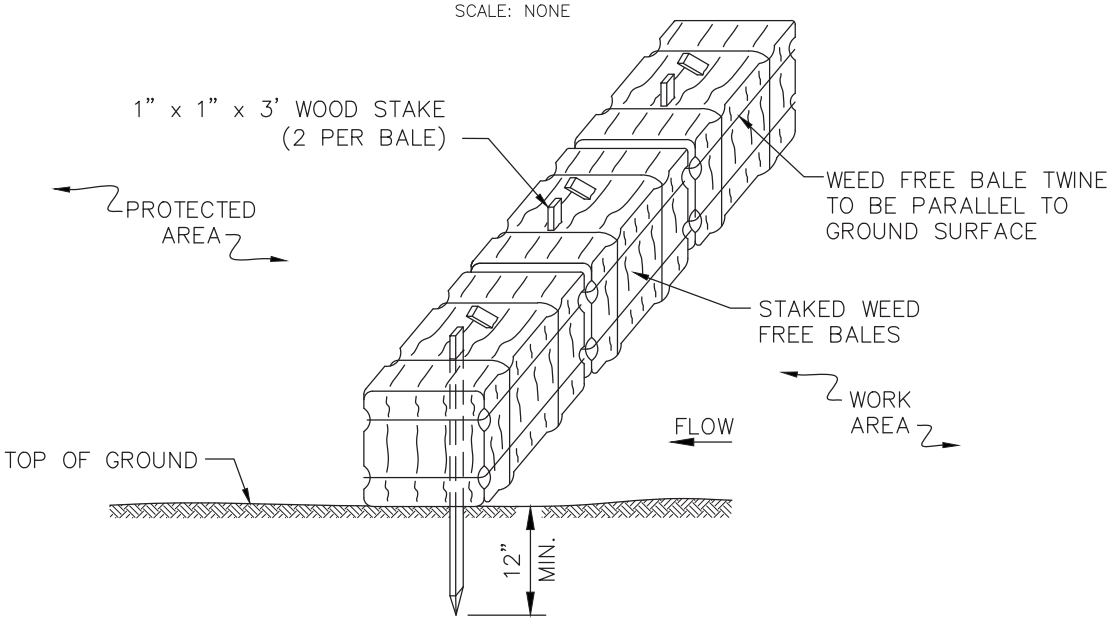

NOTES:

1. THE GROUND SHALL BE PREPARED TO PROVIDE COMPLETE CONTACT WITH THE BALES.

BMP PICTURE

BMP # 1
WEED FREE BALE BARRIER

BMP DETAIL

SCALE: NONE

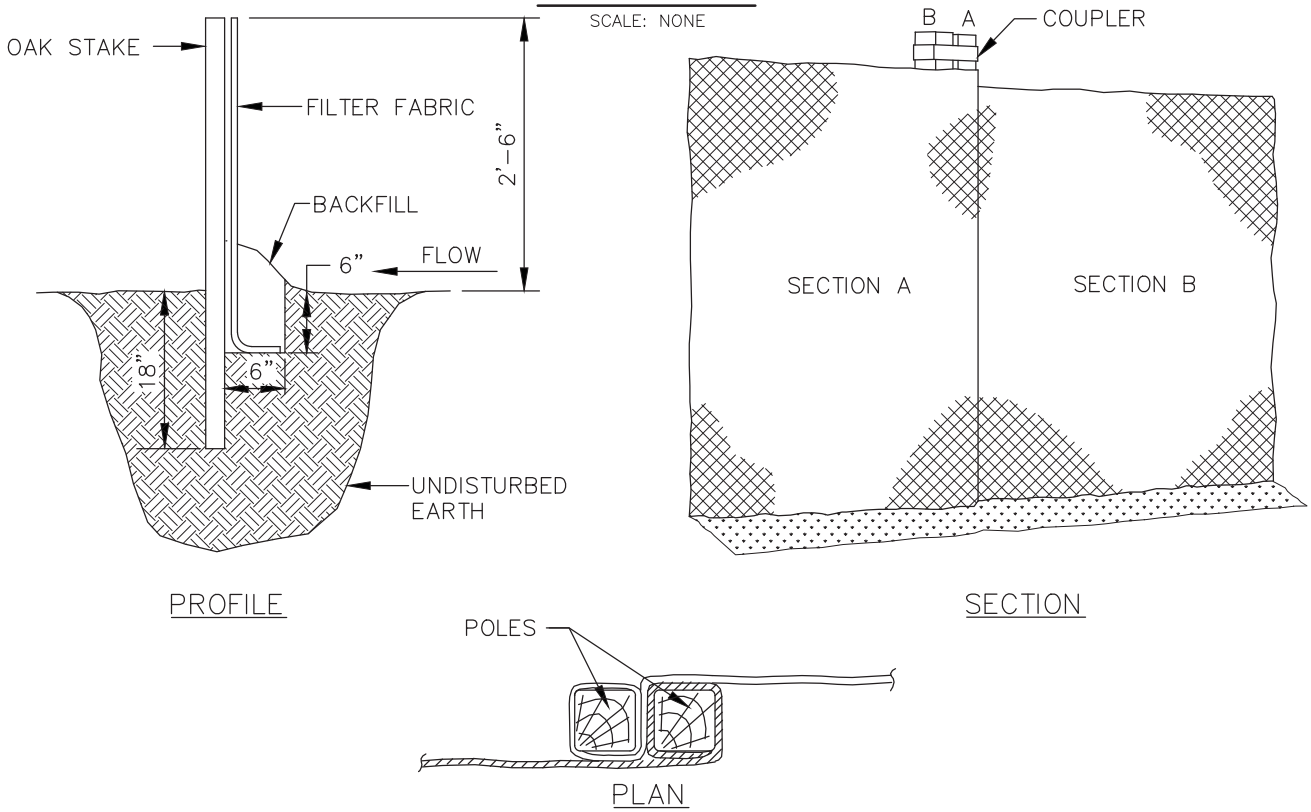

BMP PICTURE

APPROVED BY: VICE PRESIDENT, ENVIRONMENTAL SERVICES
PRINTED COPIES ARE NOT DOCUMENT CONTROLLED. FOR LATEST AUTHORIZED VERSION PLEASE REFER TO THE NATIONAL GRID ENVIRONMENTAL INFONET SITE.

BMP # 2
SEDIMENT CONTROL FENCE

File: Sediment_Fence.dwg

BMP DETAIL

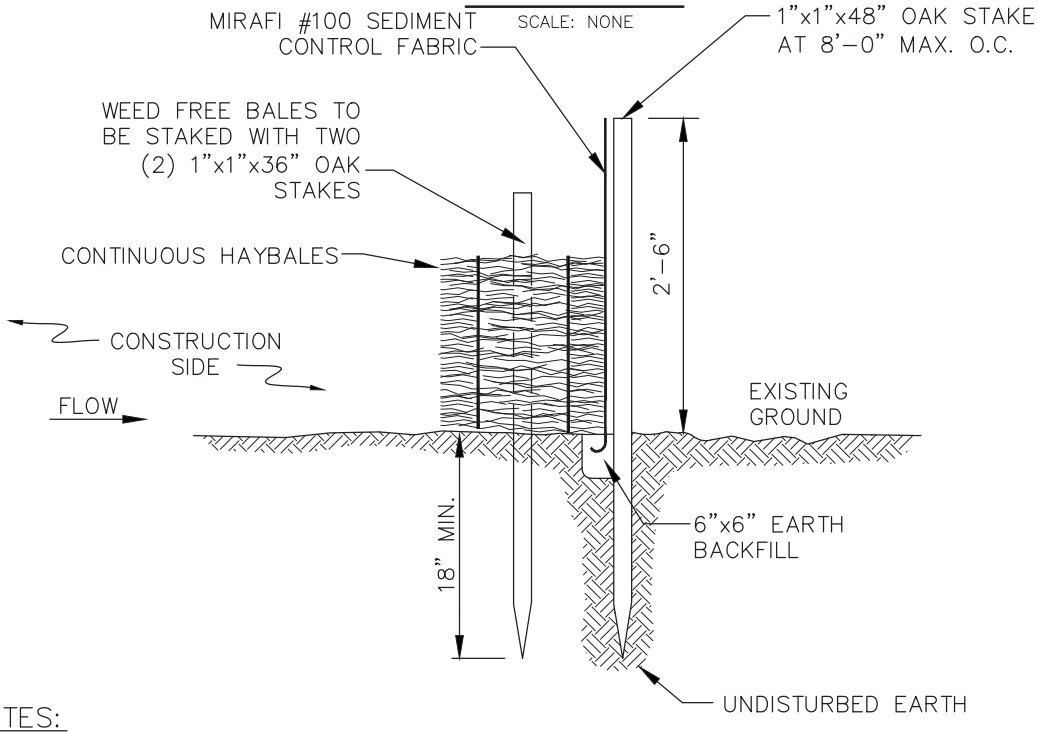

NOTES:

1. BALES SHALL BE PLACED IN A ROW WITH THE ENDS TIGHTLY ABUTTING THE ADJACENT BALES.
2. BALES SHALL BE SECURELY ANCHORED IN PLACE BY TWO (2) 1"X1"X36" OAK STAKES DRIVEN THROUGH THE BALES. THE FIRST STAKE IN EACH BALE SHALL BE ANGLED TOWARD PREVIOUSLY LAID BALE TO FORCE BALES TOGETHER.
3. INSPECTION SHALL BE FREQUENT AND REPAIR OR REPLACEMENT SHALL BE MADE PROMPTLY AS NEEDED.
4. BALES SHALL BE REMOVED AND REPLACED WHEN THEY BECOME FILLED WITH SEDIMENT AND BLOCK OR IMPEDE STORM FLOW OR DRAINAGE.
5. BALES SHALL BE REMOVED WHEN THE EMBANKMENTS STABILIZE.
6. BALES TO BE TWINE BOUND.

BMP PICTURE

APPROVED BY: VICE PRESIDENT, ENVIRONMENTAL SERVICES
PRINTED COPIES ARE NOT DOCUMENT CONTROLLED. FOR LATEST AUTHORIZED VERSION PLEASE REFER TO THE NATIONAL GRID ENVIRONMENTAL INFONET SITE.

BMP # 3
SILT FENCE /
WEED FREE BARRIER

File: Silt_Fence_&_Barrier.dwg

BMP DETAIL

SCALE: NONE

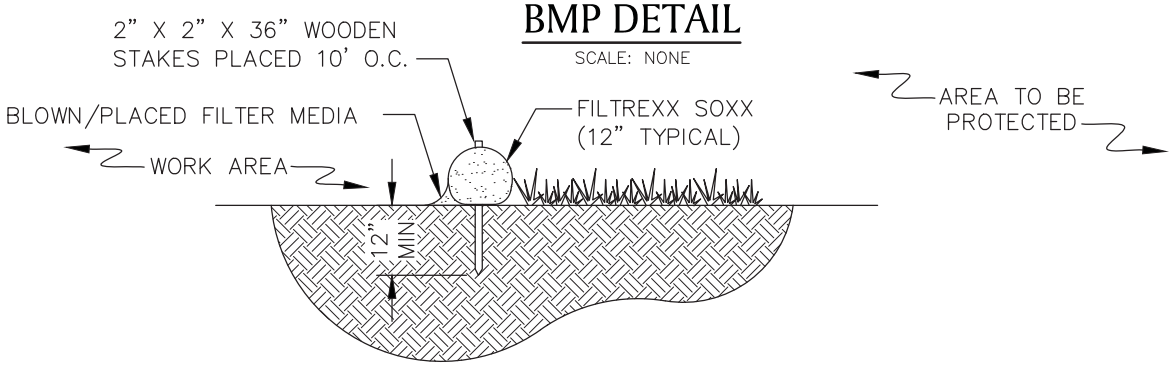

SECTION

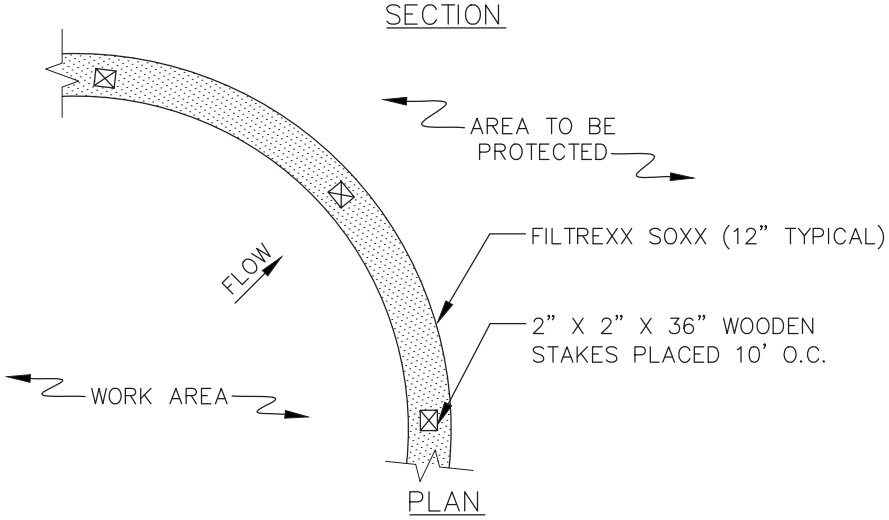

PLAN

NOTES

1. PRODUCT TO BE FILTREXX SILT SOXX OR APPROVED EQUAL BY NATIONAL GRID ENVIRONMENTAL SCIENTIST.
2. ALL MATERIAL TO MEET FILTREXX SPECIFICATIONS.
3. FILTER MEDIA FILL TO MEET APPLICATION REQUIREMENTS.
4. COMPOST MATERIAL TO BE DISPERSED ON SITE, AS DETERMINED BY NATIONAL GRID ENVIRONMENTAL SCIENTIST.

BMP PICTURE

* PICTURE AND DETAIL PROVIDED BY FILTREXX LAND IMPROVEMENT SYSTEMS

APPROVED BY: VICE PRESIDENT, ENVIRONMENTAL SERVICES

PRINTED COPIES ARE NOT DOCUMENT CONTROLLED. FOR LATEST AUTHORIZED VERSION PLEASE REFER TO THE NATIONAL GRID ENVIRONMENTAL INFONET SITE.

BMP # 4
SILT SOXX *

File: SiltSOXX.dwg

BMP DETAIL

SCALE: NONE

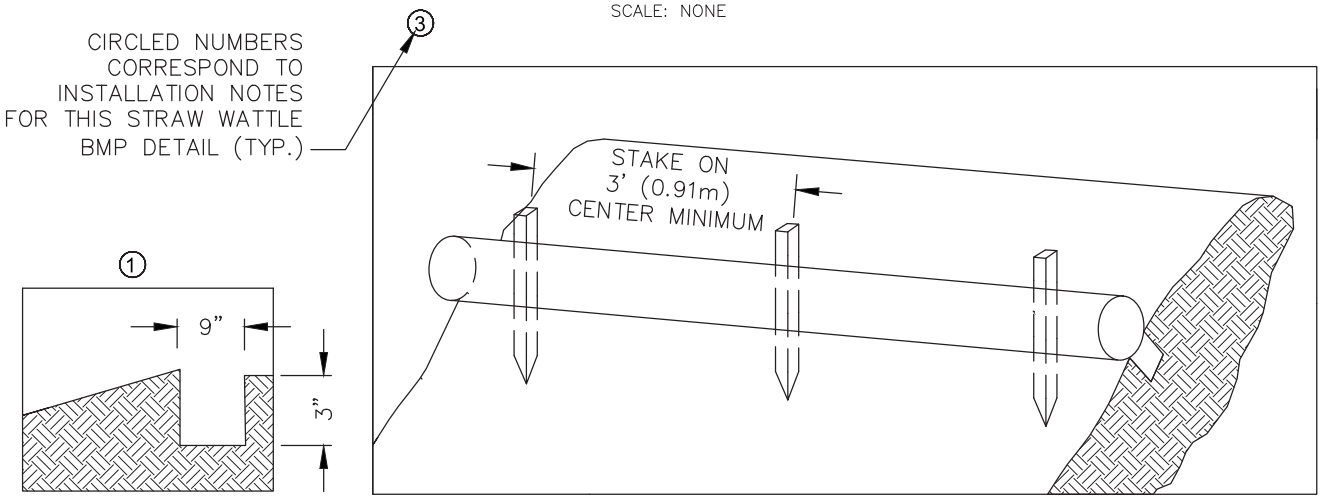

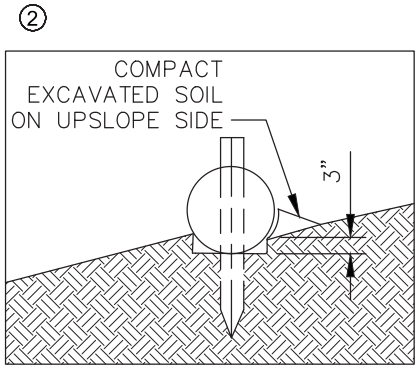

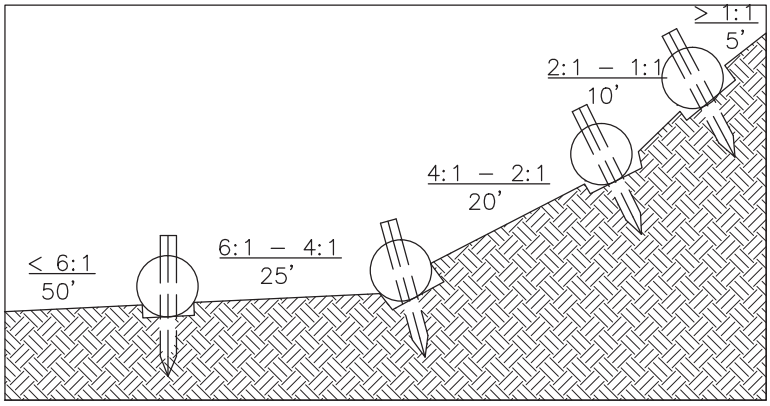

TYPICAL WATTLE SPACING DETAIL

NOTES:

1. PRODUCT TO BE TENSAR NORTH AMERICAN GREEN STRAW WATTLE OR APPROVED EQUAL BY NATIONAL GRID ENVIRONMENTAL SCIENTIST.
2. TYPICAL WATTLE SPACING BASED ON SLOPE GRADIENT. COORDINATE SPACING AND LOCATION WITH NATIONAL GRID ENVIRONMENTAL SCIENTIST.
3. MINIMUM 12" DIAMETER WATTLES SHOULD BE USED FOR HIGHLY DISTURBED AREAS (I.E., HEAVILY USED ACCESS ROAD WITH ADJACENT WETLAND) AND MINIMUM 9–10" WATTLES SHOULD BE USED FOR LESS DISTURBED SOILS.

INSTALLATION NOTES:

1. BEGIN AT THE LOCATION WHERE THE WATTLE IS TO BE INSTALLED BY EXCAVATING A 2–3" DEEP X 9" WIDE TRENCH ALONG THE CONTOUR OF THE SLOPE. EXCAVATED SOIL SHOULD BE PLACED UPSLOPE FROM THE ANCHOR TRENCH.
2. PLACE THE WATTLE IN THE TRENCH SO THAT IT CONTOURS TO THE SOIL SURFACE. COMPACT SOIL FROM THE EXCAVATED TRENCH AGAINST THE WATTLE ON THE UPHILL SIDE. ADJACENT WATTLES SHOULD TIGHTLY ABUT.
3. SECURE THE WATTLE WITH 18–24" STAKES EVERY 3–4' AND WITH A STAKE ON EACH END. STAKES SHOULD BE DRIVEN THROUGH THE MIDDLE OF THE WATTLE LEAVING AT LEAST 2–3" OF STAKE EXTENDING ABOVE THE WATTLE. STAKES SHOULD BE DRIVEN PERPENDICULAR TO THE SLOPE FACE.

* DETAIL AND PICTURE PROVIDED BY TENSAR NORTH AMERICAN GREEN

APPROVED BY: VICE PRESIDENT, ENVIRONMENTAL SERVICES

PRINTED COPIES ARE NOT DOCUMENT CONTROLLED. FOR LATEST AUTHORIZED VERSION PLEASE REFER TO THE NATIONAL GRID ENVIRONMENTAL INFONET SITE.

BMP # 5
STRAW WATTLE * (1 OF 2)

File: Straw_Wattle.dwg

BMP PICTURE

STRAW WATTLE – SHALLOW SLOPE (≤4:1)
(ALTERNATE STAKING)

ALTERNATE STAKING INSTALLATION NOTES:

1. ON SHALLOW SLOPES (≤4:1), STRAW WATTLE MAY BE SECURED WITH 18–24" STAKES DRIVEN AGAINST THE SIDES OF THE WATTLE INSTEAD OF THROUGH. STAKES SHALL ALTERNATE SIDES, AND BE SPACED 3–4' MAX.
2. TWINE SHALL BE TIED FROM STAKE TO STAKE, CRISS–CROSSING THE STRAW WATTLE. TIE TWINE TO STAKES BELOW THE HEIGHT OF THE WATTLE.

File: Straw_Wattle.dwg

*** DETAIL AND PICTURE PROVIDED BY TENSAR NORTH AMERICAN GREEN**
APPROVED BY: VICE PRESIDENT, ENVIRONMENTAL SERVICES
PRINTED COPIES ARE NOT DOCUMENT CONTROLLED. FOR LATEST AUTHORIZED VERSION PLEASE REFER TO THE NATIONAL GRID ENVIRONMENTAL INFONET SITE.

BMP # 5
STRAW WATTLE * (2 OF 2)

BMP DETAIL

SCALE: NONE

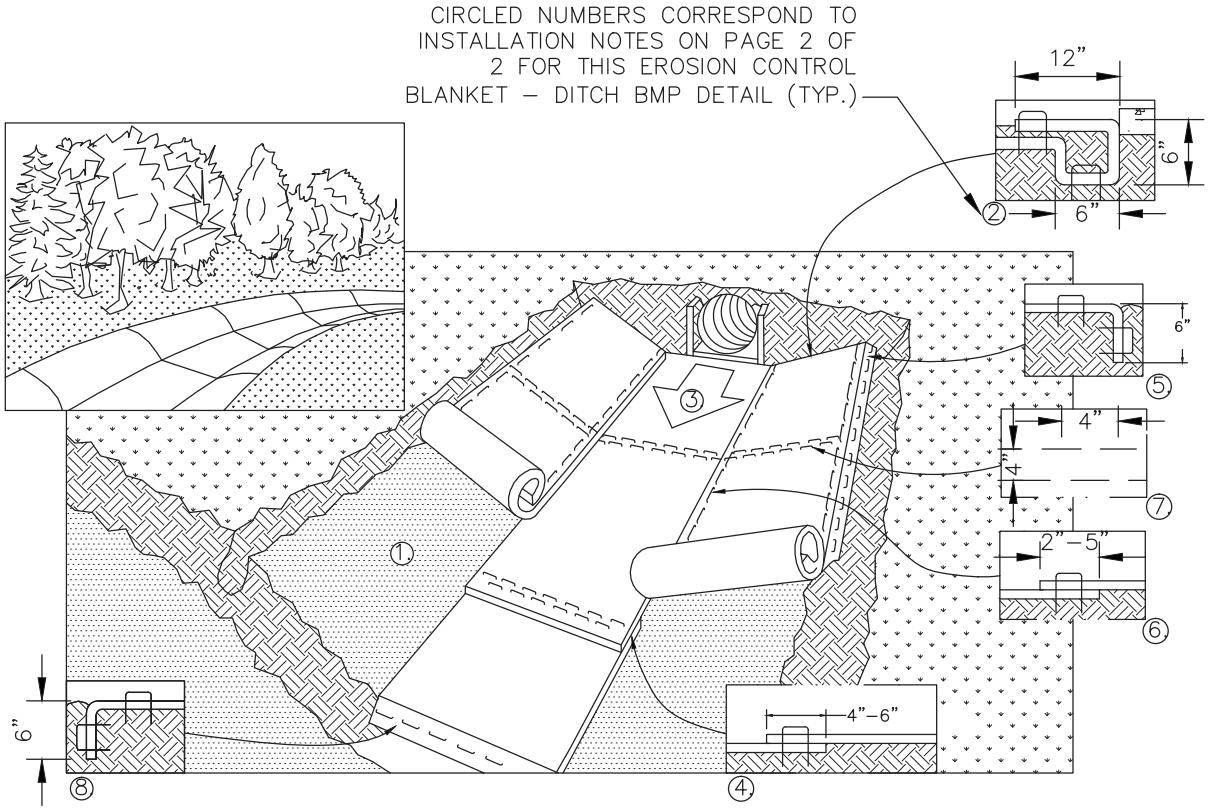

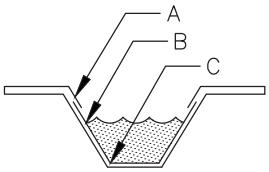

CRITICAL POINTS
A. OVERLAPS AND SEAMS
B. PROJECTED WATER LINE
C. CHANNEL BOTTOM/SIDE SLOPE VERTICES

NOTES:
1. PRODUCT TO BE NORTH AMERICAN GREEN EROSION CONTROL BLANKET OR APPROVED EQUAL BY NATIONAL GRID ENVIRONMENTAL SCIENTIST.
2. HORIZONTAL STAPLE SPACING SHOULD BE ALTERED IF NECESSARY TO ALLOW STAPLES TO SECURE THE CRITICAL POINTS ALONG THE CHANNEL SURFACE.
3. IN LOOSE SOIL CONDITIONS, THE USE OF STAPLE OR STAKE LENGTHS GREATER THAN 6" (15 CM) MAY BE NECESSARY TO PROPERLY ANCHOR THE ROLLED EROSION CONTROL PRODUCTS (RECP's).

File: Erosion_Blanket_Ditch.dwg

* PICTURE AND DETAIL PROVIDED BY TENSAR NORTH AMERICAN GREEN
APPROVED BY: VICE PRESIDENT, ENVIRONMENTAL SERVICES
PRINTED COPIES ARE NOT DOCUMENT CONTROLLED. FOR LATEST AUTHORIZED VERSION PLEASE REFER TO THE NATIONAL GRID ENVIRONMENTAL INFONET SITE.

BMP # 6
EROSION CONTROL BLANKET - DITCH * (1 OF 2)

BMP DETAIL

INSTALLATION NOTES:

1. PREPARE SOIL BEFORE INSTALLING ROLLED EROSION CONTROL PRODUCTS (RECP's), INCLUDING ANY NECESSARY APPLICATION OF LIME, FERTILIZER, AND SEED. NOTE: WHEN USING CELL-O-SEED DO NOT SEED PREPARED AREA. CELL-O-SEED MUST BE INSTALLED WITH PAPER SIDE DOWN.
2. BEGIN AT THE TOP OF THE CHANNEL BY ANCHORING THE RECP's IN A 6" (15 CM) DEEP X 6" (15 CM) WIDE TRENCH WITH APPROXIMATELY 12" (30 CM) OF RECP's EXTENDED BEYOND THE UP-SLOPE PORTION OF THE TRENCH. ANCHOR THE RECP's WITH A ROW OF STAPLES/STAKES APPROXIMATELY 12" (30 CM) APART IN THE BOTTOM OF THE TRENCH. BACKFILL AND COMAPCT THE TRENCH AFTER STAPLING. APPLY SEED TO COMPACTED SOIL AND FOLD REMAINING 12" (30 CM) PORTION OF RECP's BACK OVER SEED AND COMPACTED SOIL. SECURE RECP's OVER COMPACTED SOIL WITH A ROW OF STAPLES/STAKES SPACED APPROXIMATELY 12" (30 CM) ACROSS THE WIDTH OF THE RECP's.
3. ROLL CENTER RECP's IN DIRECTION OF WATER FLOW IN BOTTOM OF CHANNEL. RECP's WILL UNROLL WITH APPROPRIATE SIDE AGAINST THE SOIL SURFACE. ALL RECP's MUST BE SECURELY FASTENED TO SOIL SURFACE BY PLACING STAPLES/STAKES IN APPROPRIATE LOCATIONS AS SHOWN IN THE STAPLE PATTERN GUIDE. ™ WHEN USING THE DOT SYSTEM , STAPLES/STAKES SHOULD BE PLACED THROUGH EACH OF THE COLORED DOTS CORRESPONDING TO THE APPROPRIATE STAPLE PATTERN.
4. PLACE CONSECUTIVE RECP's END OVER END (SHINGLE STYLE) WITH A 4" - 6" (10 CM -15 CM) OVERLAP. USE A DOUBLE ROW OF STAPLES STAGGERED 4" (10 CM) APART AND 4" (10 CM) ON CENTER TO SECURE RECP's.
5. FULL LENGTH EDGE OF RECP's AT TOP OF SIDE SLOPES MUST BE ANCHORED WITH A ROW OF STAPLES/STAKES APPROXIMATELY 12" (30 CM) APART IN A 6" (15 CM) DEEP X 6" (15 CM) WIDE TRENCH. BACKFILL AND COMPACT THE TRENCH AFTER STAPLING.
6. ADJACENT RECP's MUST BE OVERLAPPED APPROXIMATELY 2" - 5" (5 CM -12.5 CM) (DEPENDING ON RECP's TYPE) AND STAPLED.
7. IN HIGH FLOW CHANNEL APPLICATIONS, A STAPLE CHECK SLOT IS RECOMMENDED AT 30 TO 40 FOOT (9 M - 12 M) INTERVALS. USE A DOUBLE ROW OF STAPLES STAGGERED 4" (10 CM) APART AND 4" (10 CM) ON CENTER OVER ENTIRE WIDTH OF THE CHANNEL.
8. THE TERMINAL END OF THE RECP's MUST BE ANCHORED WITH A ROW OF STAPLES/STAKES APPROXIMATELY 12" (30 CM) APART IN A 6" (15 CM) DEEP X 6" (15 CM) WIDE TRENCH. BACKFILL AND COMPACT THE TRENCH AFTER STAPLING.

BMP PICTURE

* PICTURE AND DETAIL PROVIDED BY TENSAR NORTH AMERICAN GREEN

APPROVED BY: VICE PRESIDENT, ENVIRONMENTAL SERVICES

PRINTED COPIES ARE NOT DOCUMENT CONTROLLED. FOR LATEST AUTHORIZED VERSION PLEASE REFER TO THE NATIONAL GRID ENVIRONMENTAL INFONET SITE.

BMP # 6
EROSION CONTROL BLANKET - DITCH * (2 OF 2)

File: Erosion_Blanket_Ditch.dwg

BMP DETAIL

SCALE: NONE

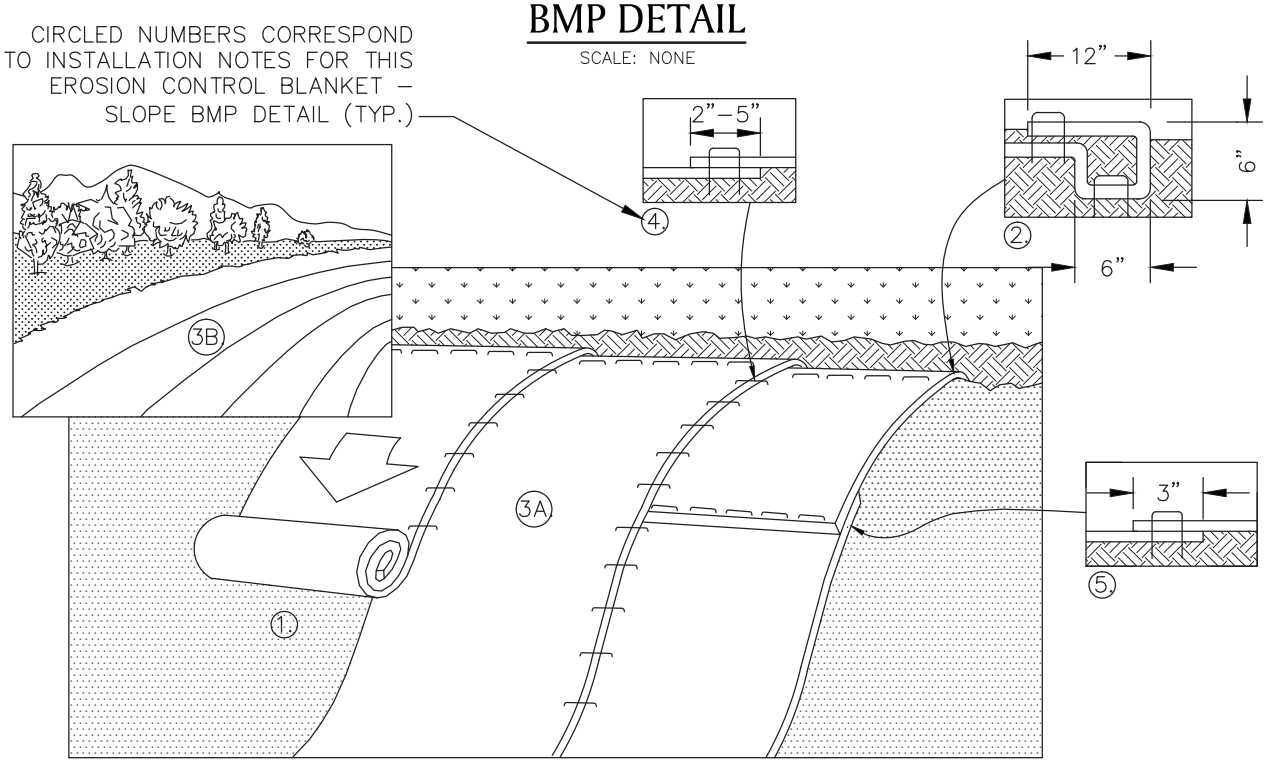

NOTES:

1. PRODUCT TO BE NORTH AMERICAN GREEN EROSION CONTROL BLANKET OR APPROVED EQUAL BY NATIONAL GRID ENVIRONMENTAL SCIENTIST.
2. IN LOOSE SOIL CONDITIONS, THE USE OF STAPLES OR STAKE LENGTHS GREATER THAN 6" (15 CM) MAY BE NECESSARY TO PROPERLY SECURE THE RECP's.

INSTALLATION NOTES:

1. PREPARE SOIL BEFORE INSTALLING ROLLED EROSION CONTROL PRODUCTS (RECP's), INCLUDING ANY NECESSARY APPLICATION OF LIME, FERTILIZER, AND SEED. NOTE: WHEN USING CELL–O–SEED DO NOT SEED PREPARED AREA. CELL–O–SEED MUST BE INSTALLED WITH PAPER SIDE DOWN.
2. BEGIN AT THE TOP OF THE SLOPE BY ANCHORING THE RECP's IN A 6" (15 CM) DEEP X 6" (15 CM) WIDE TRENCH WITH APPROXIMATELY 12" (30 CM) OF RECP's EXTENDED BEYOND THE UP–SLOPE PORTION OF THE TRENCH. ANCHOR THE RECP's WITH A ROW OF STAPLES/STAKES APPROXIMATELY 12" (30 CM) APART IN THE BOTTOM OF THE TRENCH. BACKFILL AND COMPACT THE TRENCH AFTER STAPLING. APPLY SEED TO COMPACTED SOIL AND FOLD REMAINING 12" (30 CM) PORTION OF RECP's BACK OVER SEED AND COMPACTED SOIL. SECURE RECP's OVER COMPACTED SOIL WITH A ROW OF STAPLES/STAKES SPACED APPROXIMATELY 12" (30 CM) APART ACROSS THE WIDTH OF THE RECP's.
3. ROLL THE RECP's (A.) DOWN OR (B.) HORIZONTALLY ACROSS THE SLOPE. RECP's WILL UNROLL WITH APPROPRIATE SIDE AGAINST THE SOIL SURFACE. ALL RECP's MUST BE SECURELY FASTENED TO SOIL SURFACE BY PLACING STAPLES/STAKES ™ IN APPROPRIATE LOCATIONS AS SHOWN IN THE STAPLE PATTERN GUIDE. WHEN USING THE DOT SYSTEM , STAPLES/STAKES SHOULD BE PLACED THROUGH EACH OF THE COLORED DOTS CORRESPONDING TO THE APPROPRIATE STAPLE PATTERN.
4. THE EDGES OF PARALLEL RECP's MUST BE STAPLED WITH APPROXIMATELY 2" – 5" (5 CM – 12.5 CM) OVERLAP DEPENDING ON RECP's TYPE.
5. CONSECUTIVE RECP's SPLICED DOWN THE SLOPE MUST BE PLACED END OVER END (SHINGLE STYLE) WITH AN APPROXIMATE 3" (7.5 CM) OVERLAP. STAPLE THROUGH OVERLAPPED AREA, APPROXIMATELY 12" (30 CM) APART ACROSS ENTIRE RECP's WIDTH.

* PICTURE AND DETAIL PROVIDED BY TENSAR NORTH AMERICAN GREEN

APPROVED BY: VICE PRESIDENT, ENVIRONMENTAL SERVICES

PRINTED COPIES ARE NOT DOCUMENT CONTROLLED. FOR LATEST AUTHORIZED VERSION PLEASE REFER TO THE NATIONAL GRID ENVIRONMENTAL INFONET SITE.

BMP # 7
EROSION CONTROL BLANKET - SLOPE * (1 OF 2)

File: Erosion_Blanket_Slope.dwg

BMP PICTURE

* PICTURE AND DETAIL PROVIDED BY TENSAR NORTH AMERICAN GREEN

APPROVED BY: VICE PRESIDENT, ENVIRONMENTAL SERVICES

PRINTED COPIES ARE NOT DOCUMENT CONTROLLED. FOR LATEST AUTHORIZED VERSION PLEASE REFER TO THE NATIONAL GRID ENVIRONMENTAL INFONET SITE.

BMP # 7
EROSION CONTROL BLANKET - SLOPE * (2 OF 2)

File: Erosion_Blanket_Slope.dwg

BMP PICTURE

NOTES:

1. COORDINATE MIXTURE TYPE AND APPLICATION AREAS WITH NATIONAL GRID ENVIRONMENTAL SCIENTIST PRIOR TO CONSTRUCTION.
2. A MINIMUM OF 1500 LBS. PER ACRE OF A PAPER/CORN FIBER OR EQUIVALENT WITH NATURAL TACKIFIERS WILL BE USED ON SLOPES LESS THAN 3:1.
3. A BFM (BONDED FIBER MATRIX) WILL BE USED ON SLOPES GREATER THAN 2:1.
4. A FGM (FLEXIBLE GROWTH MATRIX) OR ESM (EXTREME SLOPE MATRIX) WILL BE USED ON SLOPES GREATER THAN 1:1.
5. REFER TO BMP #10 FOR SEED MIXTURE OPTIONS.

* PICTURE PROVIDED BY TENSAR NORTH AMERICAN GREEN
* TACKIFIER INFORMATION PROVIDED BY FILTREXX LAND IMPROVEMENT SYSTEMS AND TENSAR NORTH AMERICAN GREEN

APPROVED BY: VICE PRESIDENT, ENVIRONMENTAL SERVICES

PRINTED COPIES ARE NOT DOCUMENT CONTROLLED. FOR LATEST AUTHORIZED VERSION PLEASE REFER TO THE NATIONAL GRID ENVIRONMENTAL INFONET SITE.

BMP # 8
HYDROSEEDING WITH TACKIFIER
(SLOPE STABILIZATION) *

File: Hydroseeding.dwg

BMP

Definition

Applying coarse plant residue or chips, or other suitable materials, to cover the soil surface.

Purpose

The primary purpose is to provide initial erosion control while a seeding or shrub planting is establishing. Mulch will conserve moisture and modify the surface soil temperature and reduce fluctuation of both. Mulch will prevent soil surface crusting and aid in weed control. Mulch is also used alone for temporary stabilization in non-growing months.

Conditions Where Practice Applies

On soils subject to erosion and on new seedings and shrub plantings. Mulch is useful on soils with low infiltration rates by retarding runoff.

Criteria

Site preparation prior to mulching requires the installation of necessary erosion control or water management practices and drainage systems.

Slope, grade and smooth the site to fit needs of selected mulch products.

Remove all undesirable stones and other debris to meet the needs of the anticipated land use and maintenance required.

Apply mulch after soil amendments and planting is accomplished or simultaneously if hydroseeding is used.

Select appropriate mulch material and application rate or material needs. Determine local availability.

Select appropriate mulch anchoring material.

NOTE: The best combination for grass/legume establishment is straw (cereal grain) mulch applied at 2 ton/acre (90 lbs./1000sq.ft.) and anchored with wood fiber mulch (hydromulch) at 500 – 750 lbs./acre (11 – 17 lbs./1000 sq. ft.). The wood fiber mulch must be applied through a hydroseeder immediately after mulching.

NOTE:

1. PICTURE DEPICTS STRAW MULCH APPLICATION (FROM MULCH SPREADER) ON STEEP SLOPE WITH AN IMPROVED DRAINAGE SWALE.
2. COORDINATE MULCH MATERIALS AND RATES WITH NATIONAL GRID ENVIRONMENTAL SCIENTIST.

* BMP INFORMATION FROM "NEW YORK STANDARDS AND SPECIFICATIONS FOR EROSION AND SEDIMENT CONTROL (AUGUST, 2005)." INFORMATION OBTAINED VIA WEBSITE: http://www.dec.ny.gov/chemical/29066.html

BMP # 9
MULCH MATERIALS, RATES AND USES (FROM NY) *

UPLAND ROW RESTORATION MIX – GENERAL

Species Composition Options:

- Andropogon gerardii; Niagra Big Bluestem
- Schizachyrium scoparium; Little Bluestem
- Elymus Canadensis; Canada Wild Rye
- Elymus virginicus; Virginia Wildrye
- Lolium multiflorum; Annual Ryegrass
- Sorghastrum nutans; Indiangrass
- Chamaecrista fasciculate; Partridge Pea
- Desmodium canadense; Showy Tick Trefoil
- Helioposis helianthoides; Ox–Eye Sunflower
- Panicum virgatum; Switchgrass
- Rudbeckia hirta; Black Eyed Susan
- Poa palustris; Fowl Bluegrass
- Agrostis perennans; Upland Bentgrass
- Agrostis alba; Redtop
- Festuca rubra; Red Fescue
- Lotus corniculatus; Birds–Foot Trefoil
- Chrysanthemum leucanthem; Ox–Eye Daisy
- Aster novae–angliae; New England Aster

Example Seed Mixes:

1. Native Upland wildlife forage and Cover Meadow Mix – Ernst Conservation Seeds (ERNMX–123)
2. Eastern Ecotype Native Grass Mix– Ernst Conservation Seeds (ERNMX–177)
3. New England Native Warm Season Grass Mix – New England Wetland Plants, Inc.
4. New England Logging Road Mix – New England Wetland Plants, Inc.
5. Northeast Upland Wildflower/Restoration Erosion Mix – Southern Tier Consulting (STCMX–2)

UPLAND ROW RESTORATION MIX – DRY/ROCKY SITES

Species Composition Options:

- Festuca rubra; Red Fescue
- Schizachyrium scoparium; Little Bluestem
- Elymus Canadensis; Canada Wild Rye
- Bouteloua gracillis; Blue Grama
- Lolium multiflorum; Annual Ryegrass
- Lolium perenne; Perennial Ryegrass
- Agrostics scabra; Rough Bentgrass
- Agrostis perennans; Upland Bentgrass
- Sorghastrum nutans; Indiangrass

Example Seed Mixes:

1. New England Erosion Control/ Restoration Mix for Dry Sites – New England Wetland Plants, Inc.
2. Ernst Conservation Seeds and similar companies can create a custom seed mix matching the composition above (with site specific additions if necessary).

WETLAND ROW RESTORATION MIX

Species Composition Options:

- Agrostis stolonifera; Creeping Bentgrass
- Poa trivialis; Rough Bluegrass
- Alopecurus arundinaceus; Creeping Meadow Foxtail
- Lolium multiflorum; Annual Ryegrass
- Festuca rubra; Creeping Red Fescue
- Elymus virginicus; Virginia Wildrye
- Schizachyrium scoparium; Little Bluestem
- Andropogon gerardii; Niagra Big Bluestem
- Carex vulpinoidea; Fox sedge
- Panicum virgatum; Switchgrass
- Agrostis scabra; Rough Bentgrass
- Aster novae–angliae; New England Aster
- Eupatorium perfoliatum; Boneset
- Euthamia graminifolia; Grass Leaved Goldenrod
- Scirpus atrovirens; Green Bulrush
- Verbene hastate; Blue Vervain
- Juncus effusus; Soft Rush
- Scirpus cyperinus; Wool Grass
- Panicum clandestinum; Deertongue

Example Seed Mixes

1. New England Erosion Control/Restoration Mix for Detention Basins and Moist Sites – New England Wetland Plants, Inc.
2. Northeast Wetland Grass Seed Mix – Southern Tier Consulting (STCMX–7)
3. Ernst Conservation Seeds and similar companies can create a custom seed mix matching the composition above (with site specific additions if necessary).

GERNERAL NOTES:

1. Seed mixes described herein are intended to cover a variety of typical new england landscapes. However, site specific seed mixes will need to be evaluated in coastal or mountainous regions.
2. Seed mixes described herein are intended for general ROW restoration. Site specific wetland seed mixes may be required by local, state and/or federal regulators for certain impacts to wetlands.
3. All seed mixes are to be approved by National Grid Environmental Scientist prior to construction and must conform with all project permits.
4. Seedbed preparation and maintenance as well as temporary erosion and sediment controls are crucial to the establishment of newly seeded areas. Coordinate with National Grid Environmental Scientist on seed bed preparation and maintenance as well as temporary erosion and sediment controls prior to construction.

BMP PICTURE

SCALE: NONE

NOTES:

1. PRODUCT TO BE ALTURNAMATS' PREFABRICATED MATS OR APPROVED EQUAL BY NATIONAL GRID ENVIRONMENTAL SCIENTIST.
2. PRODUCT AVAILABLE IN 4X8' UNITS.
3. IF MATS ARE INSTALLED IN A WETLAND AREA, INSTALL EROSION CONTROLS TO CONTAIN MATERIAL UTILIZED IN THE MAT TRANSITIONS.

* PICTURE PROVIDED BY ALTURNAMATS

APPROVED BY: VICE PRESIDENT, ENVIRONMENTAL SERVICES

PRINTED COPIES ARE NOT DOCUMENT CONTROLLED. FOR LATEST AUTHORIZED VERSION PLEASE REFER TO THE NATIONAL GRID ENVIRONMENTAL INFONET SITE.

BMP # 12
PREFABRICATED MATS *

File: Prefab_Mats.dwg

BMP DETAIL

SCALE: NONE

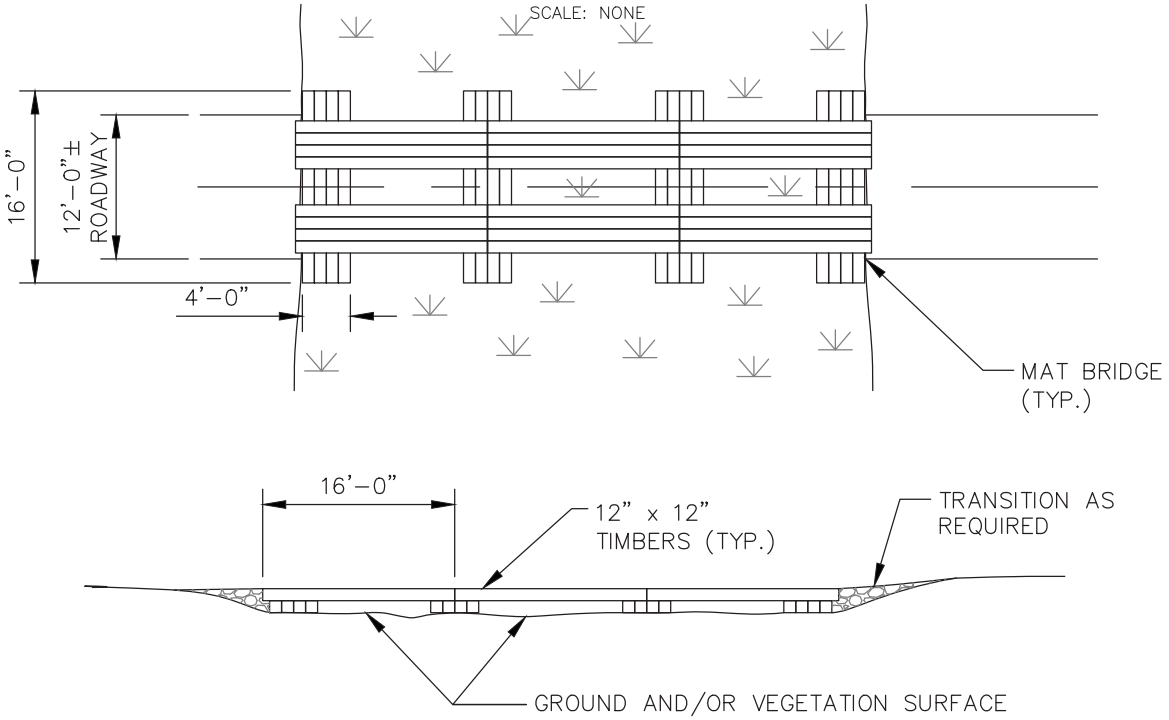

NOTES:

1. IF MATS ARE INSTALLED IN A WETLAND AREA, INSTALL EROSION CONTROLS TO CONTAIN MATERIAL UTILIZED IN THE MAT TRANSITIONS.

BMP PICTURE

BMP # 13
MAT BRIDGE

BMP DETAIL

SCALE: NONE

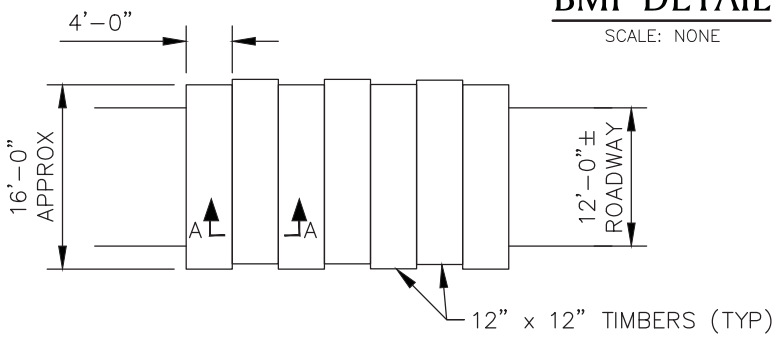

TYPICAL PLAN VIEW

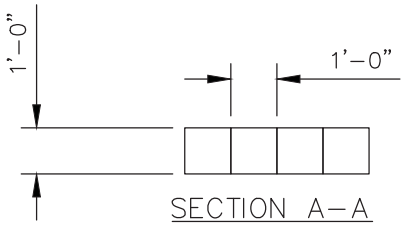

SECTION A–A
TYPICAL MAT SECTION
BOLTED TOGETHER

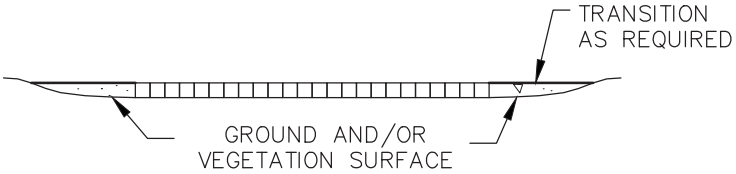

TYPICAL SECTION VIEW

NOTES:

1. TO BE INSTALLED IF NECESSARY TO PREVENT RUTTING, TO ACCESS STRUCTURES.
2. THIS DETAIL SHOWS TYPICAL DIMENSIONS. SOME CONTRACTOR'S SWAMP MATS ARE DIMENSIONALLY DIFFERENT FROM WHAT IS SHOWN HERE.
3. DEPENDENT ON SITE CONDITIONS, MULTIPLE LAYERS OF SWAMP MATS MAY BE INSTALLED.

BMP PICTURE

File: Swamp_Mat_Layout.dwg

BMP # 14
SWAMP MAT LAYOUT
(WITH TRANSITION)

BMP DETAIL

SCALE: NONE

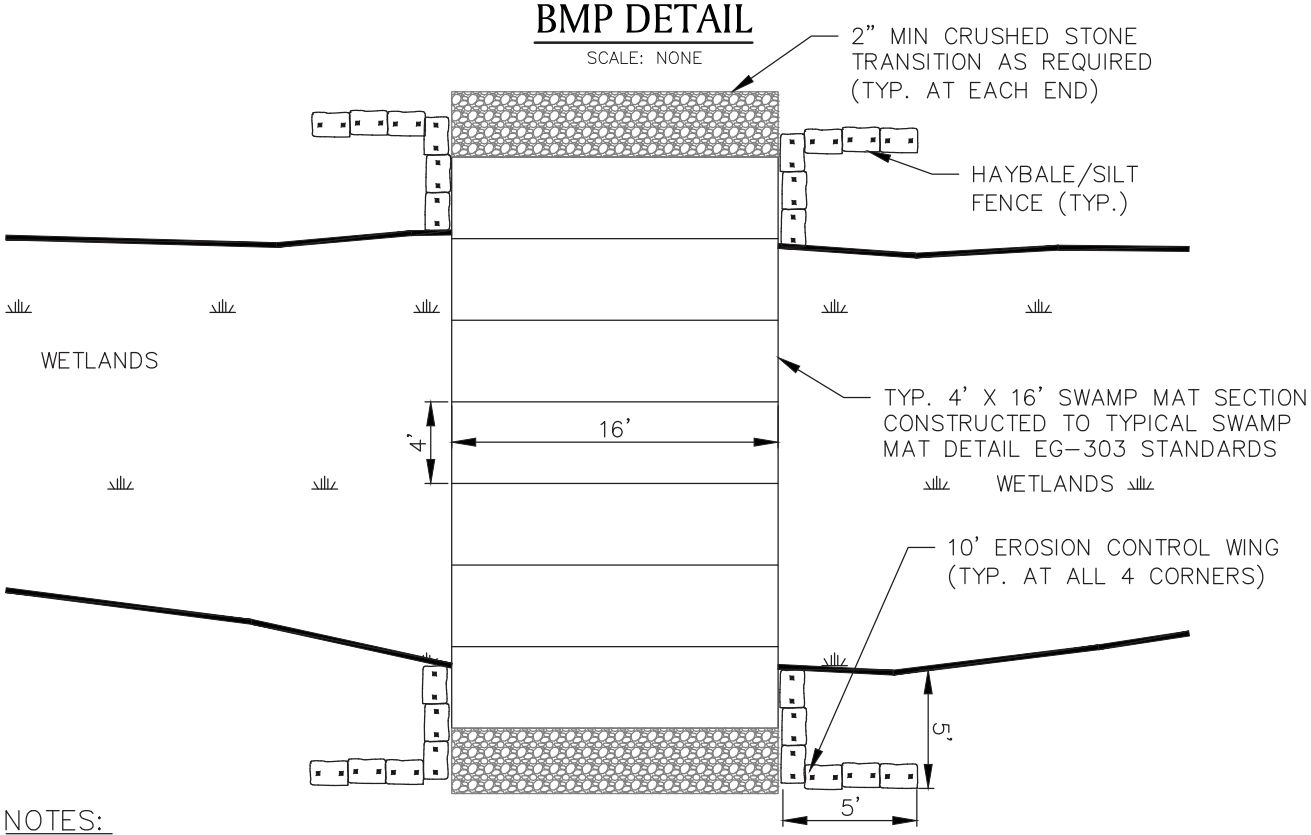

NOTES:

1. ADD FILTER FABRIC AS NEEDED UNDER STONE TRANSITION RAMPS.
2. ALL MEASUREMENTS AND LOCATIONS ARE APPROXIMATE.

BMP PICTURE

File: Swamp_Mat_Transition and BMPs.dwg

BMP # 15
SWAMP MAT LAYOUT
(WITH TRANSITION AND BMPs)

BMP DETAIL

SCALE: NONE

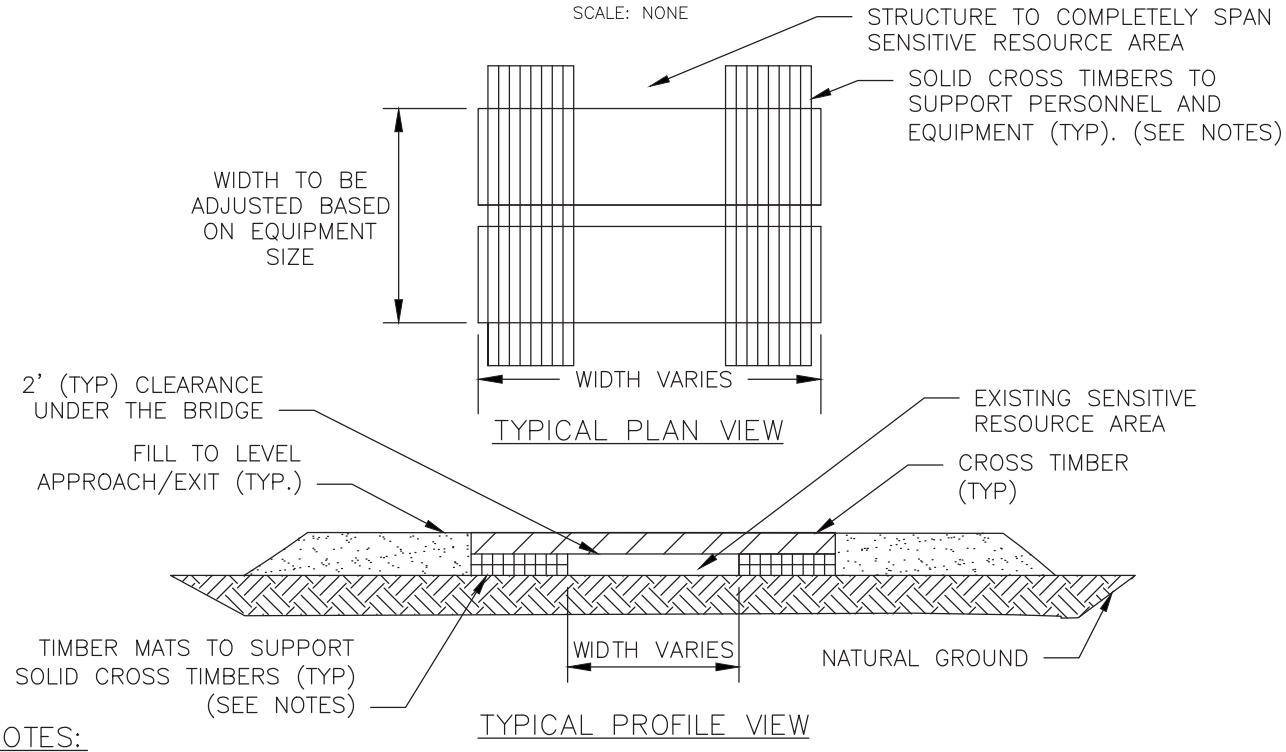

NOTES:

1. THE DETAIL SHOWN IS CONCEPTUAL. TIMBER MATS AND CROSS TIMBERS SHALL BE SIZED AND SELECTED BASED ON SPAN WIDTH, CROSSING EQUIPMENT AND FIELD CONDITIONS.
2. THE NUMBER OF TIMBER MATS MAY VARY DEPENDING ON THE CLEARANCE HEIGHT.
3. EQUIPMENT AND PERSONNEL LOAD SHALL BE DISTRIBUTED ON ALL TIMBERS.
4. EACH EQUIPMENT OPERATOR AND USER OF THE FIELD BRIDGE SHALL BE FAMILIAR WITH THE DESIGN AND THE MAXIMUM EQUIPMENT AND PERSONNEL LOADS.
5. THIS DETAIL MAY NOT BE APPLICABLE IN ALL FIELD CONDITIONS.
6. INSTALL EROSION CONTROLS ADJACENT TO THE CULVERT ENDS TO PROTECT THE WATERWAY FROM ROADWAY DEBRIS.

BMP PICTURE

BMP DETAIL

SCALE: NONE

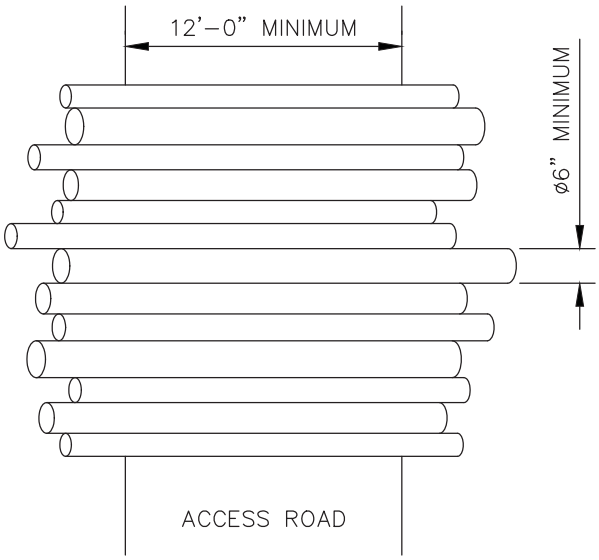

RANDOM LENGTH AND DIAMETER LOGS PLACED ACROSS AN ACCESS ROAD

NOTE:

1. A SIMILAR BRUSH MAT INSTALLATION CONSISTING OF SMALLER DIAMETER STEMS AND LOGS CAN BE USED.
2. CORDUROY ROADS SHALL ONLY BE USED IN EMERGENCIES OR AFTER APPROVAL FROM THE PROJECT ENVIRONMENTAL CONSULTANT OR NATIONAL GRID ENVIRONMENTAL SCIENTIST.

BMP PICTURE

BMP DETAIL

SCALE: NONE

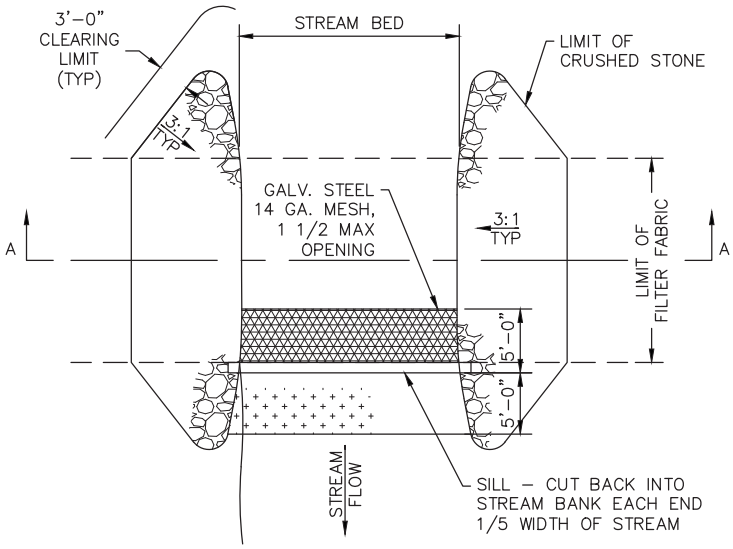

PLAN VIEW

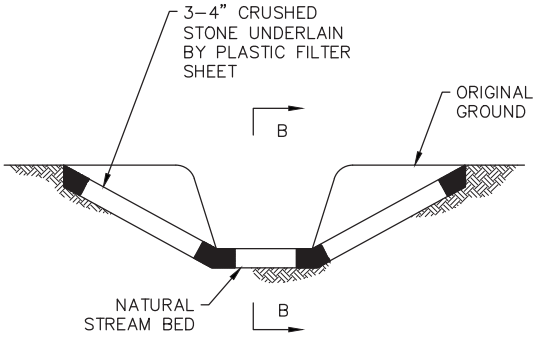

SECTION 'A–A'

BMP PICTURE

BMP # 18
ROCK FORD

BMP DETAIL

SCALE: NONE

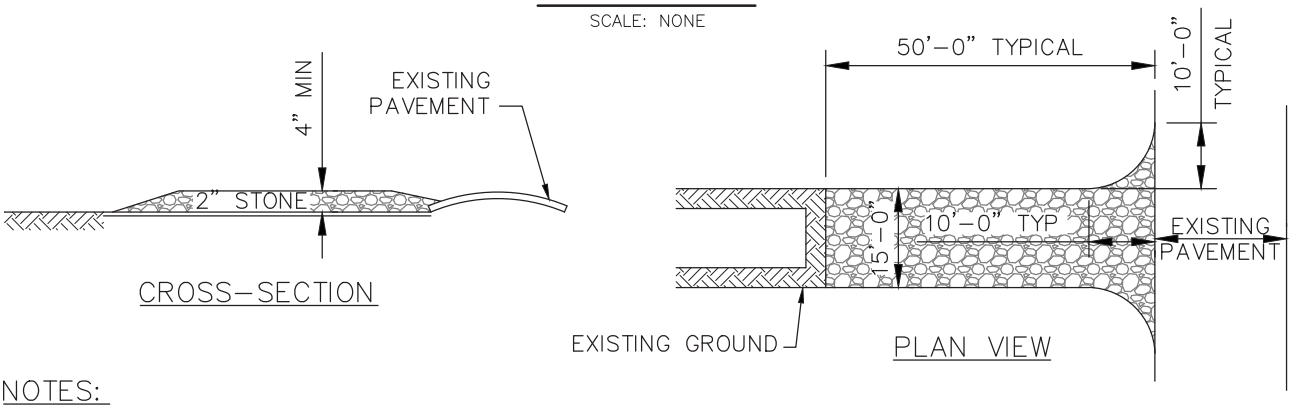

NOTES:

1. STONE SIZE – USE 2" STONE (MINIMUM) TO 6" STONE (MAXIMUM)
2. LENGTH – GREATER THAN OR EQUAL TO 50 FEET
3. THICKNESS – 4"
4. WIDTH – FIFTEEN (15) FOOT TYP., BUT NOT LESS THAN FULL WIDTH AT POINTS WHERE INGRESS OR EGRESS OCCURS.
5. SURFACE WATER – ALL SURFACE WATER FLOWING OR DIVERTED TOWARD CONSTRUCTION ENTRANCES SHALL BE PIPED ACROSS ENTRANCE. IF PIPING IS IMPRACTICAL, MOUNTABLE BERM SHALL BE PERMITTED.
6. MAINTENANCE – THE ENTRANCE SHALL BE MAINTAINED IN A CONDITION WHICH SHALL PREVENT TRACKING OR FLOWING OF SEDIMENT ONTO PUBLIC RIGHTS-OF-WAY. THIS MAY REQUIRE PERIODIC TOP DRESSING WITH ADDITIONAL STONE AS CONDITIONS DEMAND AND REPAIR OR CLEANOUT OF ANY MEASURES USED TO TRAP SEDIMENT. ALL SEDIMENT SPILLED, DROPPED, WASHED OR TRACKED ONTO PUBLIC RIGHTS-OF-WAY MUST BE REMOVED IMMEDIATELY.
7. PERIODIC INSPECTION AND NEEDED MAINTENANCE SHALL BE PROVIDED.
8. THE CLEAN STONE SHOULD BE INSTALLED OVER A GEOTEXTILE FABRIC. GEOTEXTILE FABRIC MAY BE OMITTED FOR PERMANENT CONSTRUCTION ENTRANCES/EXITS ON A CASE-BY-CASE BASIS WITH THE APPROVAL OF THE NATIONAL GRID ENVIRONMENTAL SCIENTIST.
9. FOLLOWING CONSTRUCTION, THE CONSTRUCTION ENTRANCE/EXIT SHALL BE REMOVED AND THE AREA GRADED, SEEDED, AND MULCHED AS NEEDED. ENTRANCE/EXITS MAY REMAIN DEPENDING UPON FUTURE ACCESS NEEDS AND/OR PROJECT-SPECIFIC APPROVALS BUT REQUIRES APPROVALS FROM THE NATIONAL GRID ENVIRONMENTAL SCIENTIST AND PROPERTY LEGAL.

BMP PICTURE

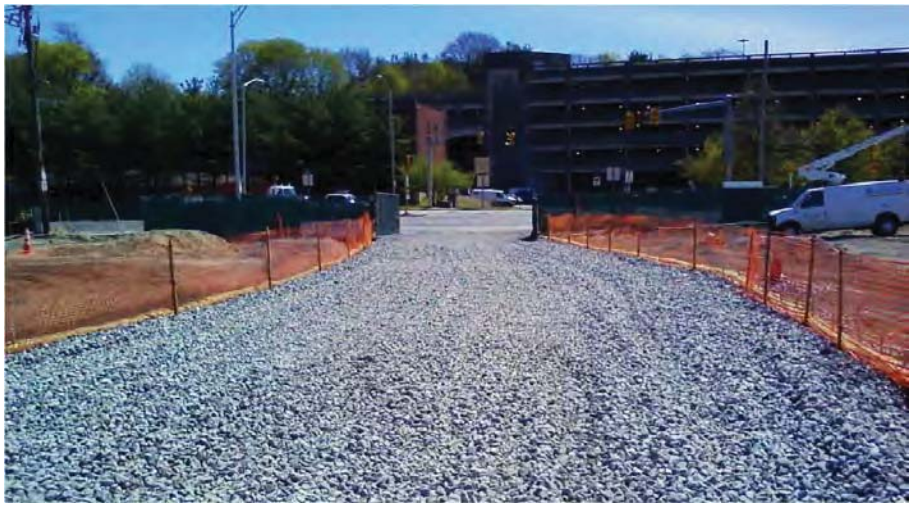

BMP DETAIL

SCALE: NONE

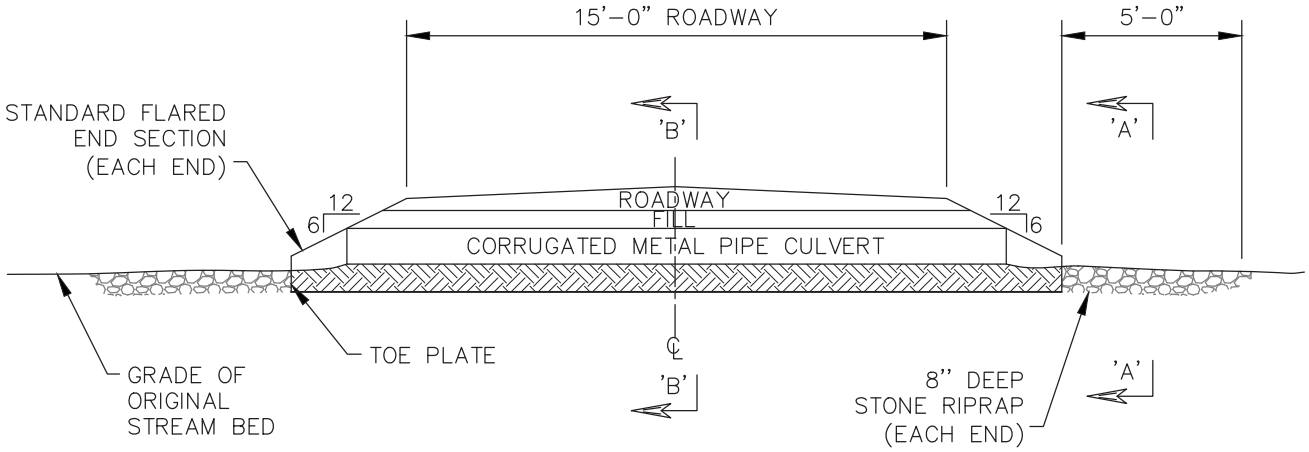

CROSS SECTION

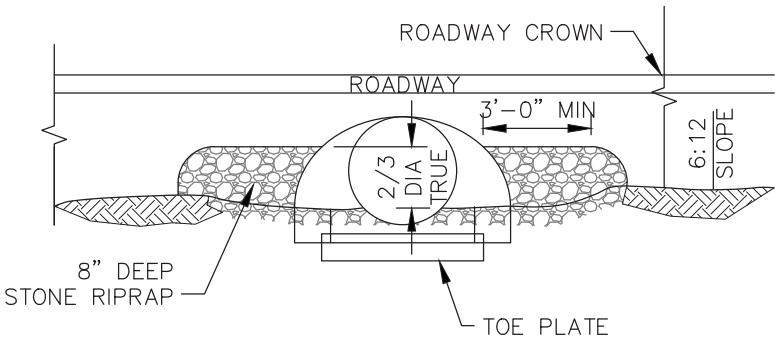

SECTION 'A-A'
(SAME BOTH ENDS)

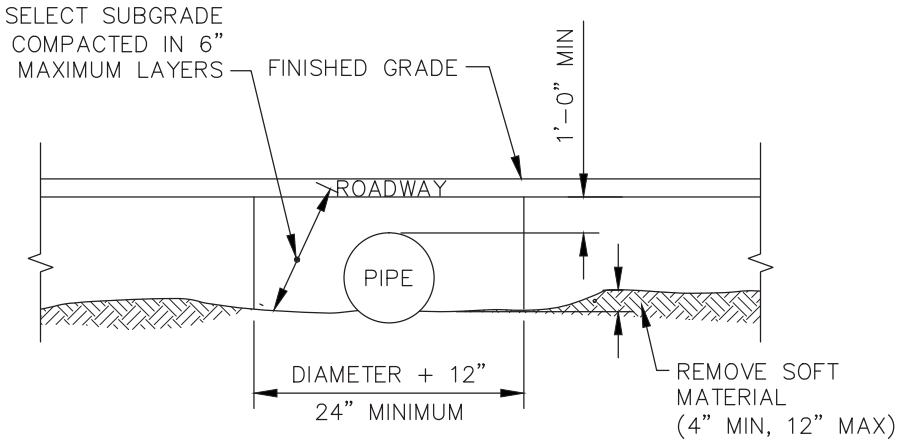

SECTION 'B-B'

BMP # 19
TEMPORARY CONSTRUCTION CULVERT (1 OF 2)

BMP DETAIL

SCALE: NONE

NOTES:

1. CULVERT DESIGN AND LAYOUT SHALL BE COORDINATED WITH NATIONAL GRID ENVIRONMENTAL SCIENTIST (NGES).
2. CROWN ROADWAY 1/2 INCH PER FOOT.
3. LAY THE CULVERT STRAIGHT AND AS NEARLY AS POSSIBLE ALONG THE EXISTING STREAM BED AND WITH THE INVERTS AT OR SLIGHTLY BELOW BED ELEVATION.
4. CORRUGATED METAL PIPE IS TO BE GALVANIZED STEEL, OR ALUMINIZED STEEL (TYPE 2), WITH BOLTED CONNECTORS.
5. DIAMETERS SHALL BE AS PER THE PROJECT DRAWINGS AND THE SPECIFICATION. THE PIPE GAGE SHALL BE AS FOLLOWS:

DIAMETER (INCHES)	GAGE
12" – 15"	.004"
18" – 24"	.079"
30" – 36"	.109"

6. INSTALLATION OF CULVERTS LARGER THAN 36 INCH DIAMETER SHALL REQUIRE SPECIAL ENGINEERING DESIGN.
7. SELECT SUBGRADE SHALL BE A GRANULAR MATERIAL AS DESCRIBED IN NYSDOT SPECIFICATION ITEM 203–2.02C, OR AS APPROVED BY A NGES.
8. STONE RIPRAP SHALL BE AS DESCRIBED IN NYSDOT SPECIFICATION ITEM 203–2.02D, WITH 8 INCH MAXIMUM SIZE, OR AS APPROVED BY A NGES. EXCEPT WHERE PROTECTED BY STONE, ALL EMBANKMENT SLOPES ARE TO BE STABILIZED, MULCHED AND SEEDED AS PER PROJECT SPECIFICATIONS.
9. OUTLET SHOULD BE CONFIGURED NOT TO CREATE HYDRAULIC JUMP OR PLUNGE POOL.
10. INSTALL EROSION CONTROLS ADJACENT TO THE CULVERT ENDS TO PROTECT THE WATERWAY FROM ROADWAY DEBRIS.

BMP PICTURE

File: Temp_Constr_Culvert.dwg

BMP # 20
TEMPORARY CONSTRUCTION CULVERT (2 OF 2)

BMP PICTURE

NOTE:

1. PICTURE SHOWS VIEW OF ACCESS WAY STABILIZATION ADJACENT TO A WETLAND.
2. COORDINATE STABILIZATION DESIGN AND PRODUCT WITH NATIONAL GRID ENVIRONMENTAL SCIENTIST.

BMP # 21
ACCESS WAY STABILIZATION

BMP PICTURE

NO ACCESS – WETLAND/STREAM CROSSING MATS REQUIRED

NO ACCESS – A.) PROJECT LIMITS E.G. ROW LIMITS
B.) HISTORICAL/CULTURAL
C.) ENVIRONMENTALLY SENSITIVE E.G. THREATENED & ENDANGERED
D.) OTHER

APPROVED ACCESS

BMP DETAIL

SCALE: NONE

WIRE BACKED SILT FENCE

MUTUAL INDUSTRIES WIRE BACKED SILT FENCE
PART # 1776-14-24
36" X 100'
36" MISF 1776 FABRIC
24" 14GA WIRE MESH
OPENING OF MESH 2" X 4"
FABRIC HOG RINGED EVERY 12"-18" ALONG THE TOP OF THE FENCE

ROLL WEIGHT 40 LBS

32 ROLLS PER PALLET

NOTES:

1. PRODUCT TO BE MUTUAL INDUSTRIES' WIRE BACKED SILT FENCE OR APPROVED EQUAL BY NATIONAL ENVIRONMENTAL SCIENTIST.
2. COORDINATE INSTALLATION METHOD AND LOCATION WITH NATIONAL GRID ENVIRONMENTAL SCIENTIST.

File: Reinforced_Silt_Fence.dwg

* PICTURE AND DETAIL PROVIDED BY MUTUAL INDUSTRIES
APPROVED BY: VICE PRESIDENT, ENVIRONMENTAL SERVICES
PRINTED COPIES ARE NOT DOCUMENT CONTROLLED. FOR LATEST AUTHORIZED VERSION PLEASE REFER TO THE NATIONAL GRID ENVIRONMENTAL INFONET SITE.

BMP # 23
REINFORCED SILT FENCE *

BMP PICTURE

NOTE:

1. PICTURE SHOWS SEDIMENT FILTER WITHIN A WETLAND.

BMP DETAIL

SCALE: NONE

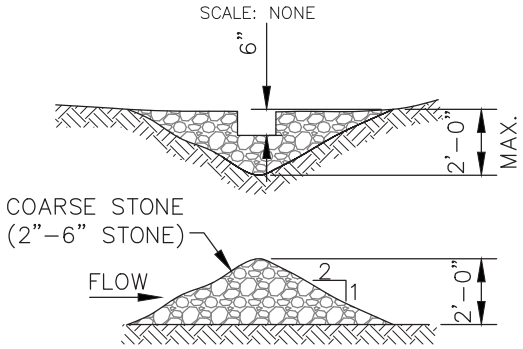

STONE CHECK DAM

NOTES:

1. USE CHECK DAMS TO SLOW WATER FLOWS AND AS SMALL SEDIMENT TRAPS IN DITCHES ALONG ACCESS ROADS.
2. CLEAN SEDIMENT AND REPLACE DAMS AS NECESSARY.
3. THE CENTER OF THE CHECK DAM MUST BE AT LEAST 6" LOWER THAN THE OUTER EDGES.
4. COORDINATE SPACING WITH NATIONAL GRID ENVIRONMENTAL SCIENTIST.
5. MAX. SPACING: TOE OF THE UPSTREAM DAM IS SAME ELEVATION AS TOP OF DOWNSTREAM DAM.
6. STONE SHALL BE FREE OF FINE PARTICLES TO PREVENT TURBID DISCHARGES.

BMP PICTURE

NOTE: A SMALLER STONE SIZE IS SHOWN IN THIS PICTURE.

BMP DETAIL

SCALE: NONE

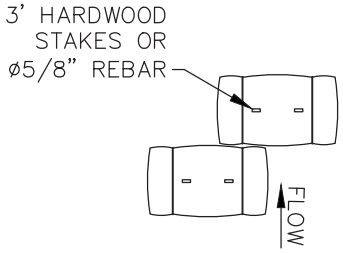

PLAN VIEW

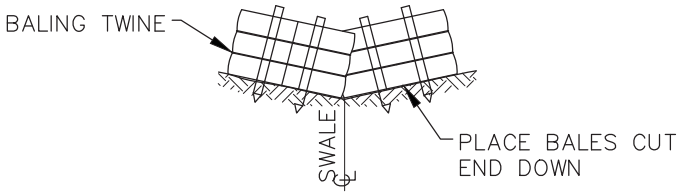

SECTION VIEW

NOTES:

1. USE CHECK DAMS TO SLOW WATER FLOWS AND AS SMALL SEDIMENT TRAPS IN DITCHES ALONG ACCESS ROADS.
2. CLEAN SEDIMENT AND REPLACE DAMS AS NECESSARY.
3. COORDINATE SPACING WITH NATIONAL GRID ENVIRONMENTAL SCIENTIST.

BMP PICTURE

BMP # 26
STRAW / HAYBALE CHECK DAM

BMP DETAIL

SCALE: NONE

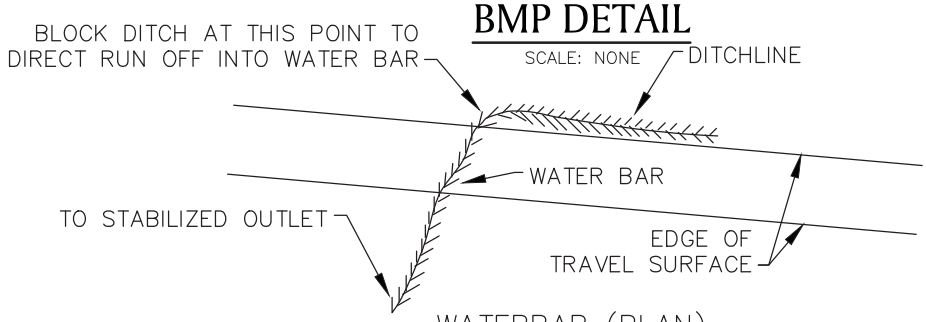

WATERBAR (PLAN)

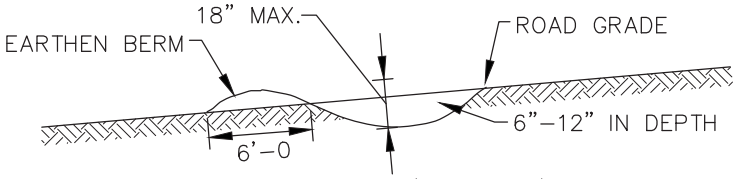

WATERBAR (SECTION)

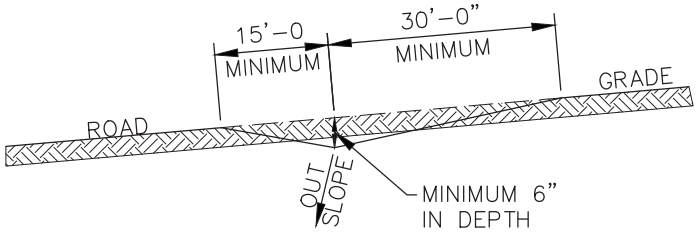

DISCHARGE (SECTION)

NOTE:

1. LINE WITH 2"–6" STONE UNDERLAIN BY GEOTEXTILE FILTER FABRIC, KEYED INTO ROAD SURFACE AT LEAST 10 FEET EACH SIDE OF WATERBAR.
2. COORDINATE SPACING WITH NATIONAL GRID ENVIRONMENTAL SCIENTIST.

BMP PICTURE

BMP # 27
WATERBAR

BMP DETAIL

SCALE: NONE

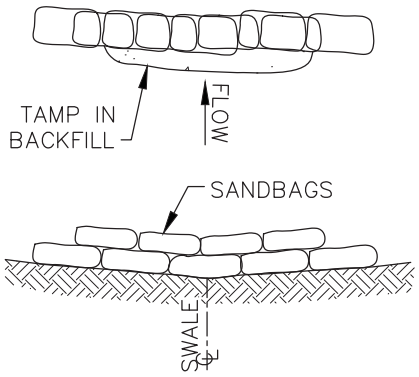

SANDBAG
CHECK DAM

NOTES:

1. USE CHECK DAMS TO SLOW WATER FLOWS AND AS SMALL SEDIMENT TRAPS IN DITCHES ALONG ACCESS ROADS.
2. CLEAN SEDIMENT AND REPLACE DAMS AS NECESSARY.
3. COORDINATE SPACING WITH NATIONAL GRID ENVIRONMENTAL SCIENTIST.

BMP PICTURE

NOTE:

1. PICTURE DOES NOT DEPICT "TAMP IN BACKFILL"

BMP # 28
SANDBAG CHECK DAM

BMP PICTURE

NOTE:

1. EXACT SIZE, LOCATION AND DESIGN IS DEPENDANT ON SITE CONDITIONS, AND LOCAL AND STATE REGULATIONS. COORDINATE THIS BMP WITH NATIONAL GRID ENVIRONMENTAL SCIENTIST PRIOR TO CONSTRUCTION.

BMP DETAIL

SCALE: NONE

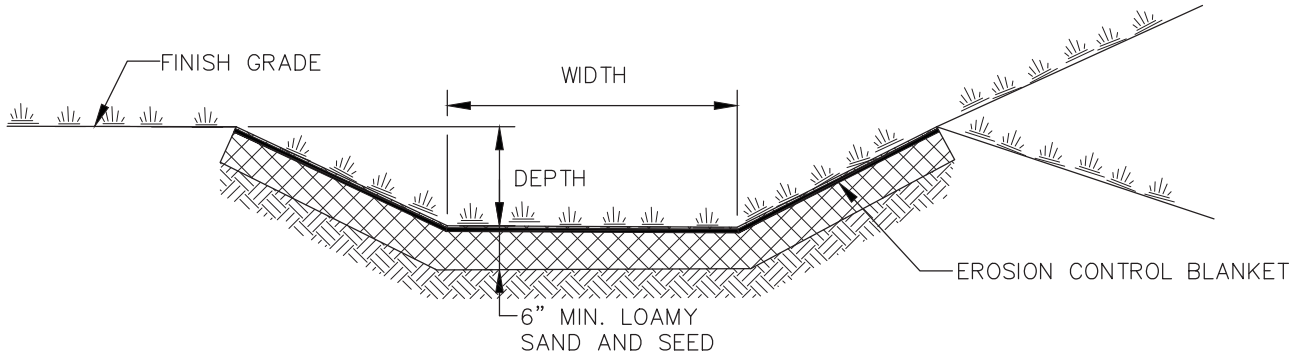

NOTES:

1. WIDTH AND DEPTH OF SWALE, AND EROSION CONTROL BLANKET TYPE TO BE COORDINATED WITH NATIONAL GRID ENVIRONMENTAL SCIENTIST.
2. REFER TO BMP # 10 FOR SEED MIXTURE OPTIONS.

BMP PICTURE

BMP # 30
DRAINAGE SWALE AND
LINED DITCH

BMP DETAIL

SCALE: NONE

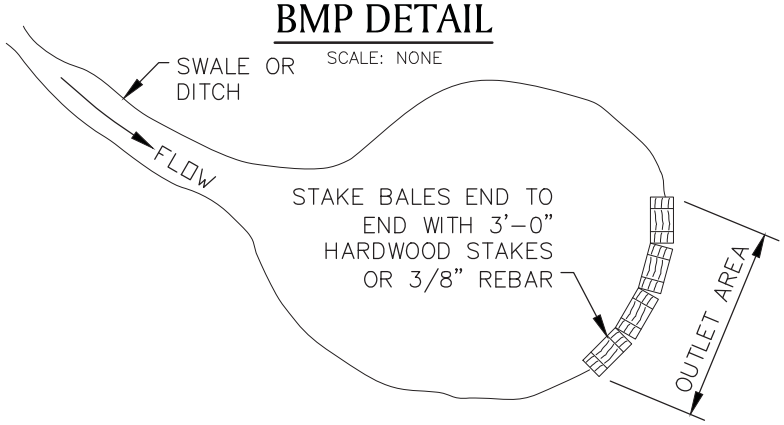

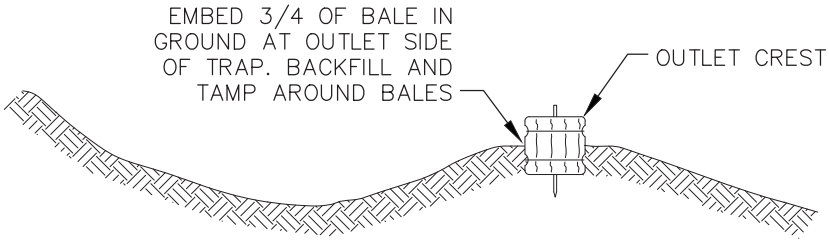

TYPICAL PROFILE

NOTES

1. SIZE, SHAPE AND PROFILE OF SEDIMENT WILL VARY ACCORDING TO ANTICIPATED FLOW VOLUME AND SURROUNDING TERRAIN AND SHALL BE COORDIANTED WITH THE NATIONAL GRID ENVIRONMENTAL SCIENTIST.
2. THE BASIN SHALL BE CUT BELOW THE GROUNDLINE. FILL SHALL NOT BE USED TO HOLD WATER UNLESS ROLLED AND COMPACTED.
3. OUTLET AREA IS TO REMAIN FREE OF EXCAVATION SPOILS.
4. OUTLET CREST ELEVATION SHALL BE LOWER THAN INLET ELEVATION AND AT LEAST 1'-0'' BELOW THE TOP OF THE BASIN.ARMOUR SLOPES >8% IN OUTLET AREA WITH STONE OF APPROPRIATE SIZE TO PREVENT SCOUR.
5. ARMOUR SLOPES >8% IN OUTLET AREA WITH STONE OF APPROPRIATE SIZE TO PREVENT SCOUR.

BMP PICTURE

BMP # 31
SEDIMENTATION BASIN

BMP DETAIL

SCALE: NONE

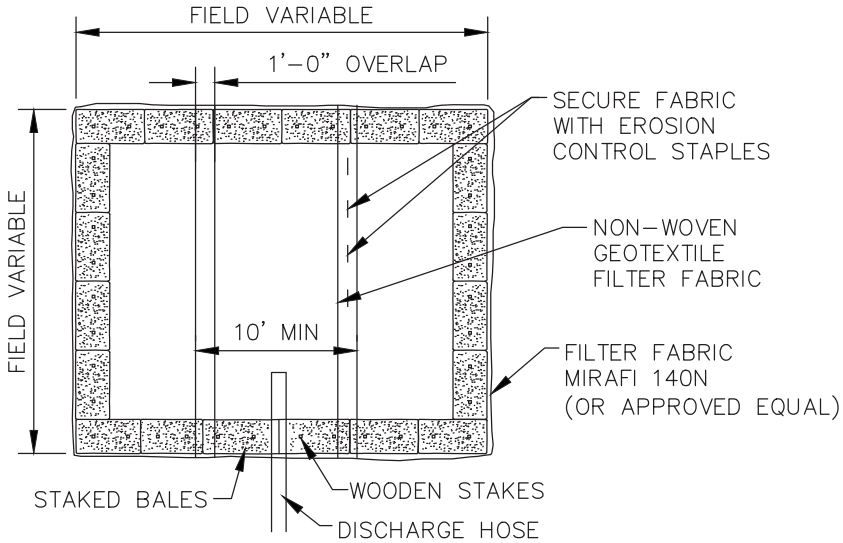

PLAN VIEW

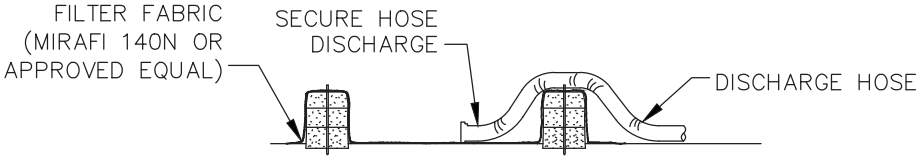

CROSS–SECTION

NOTES:

1. NUMBER OF BALES MAY VARY DEPENDING ON SITE CONDITIONS,
2. THE BASIN TO BE SIZED TO PREVENT DISCHARGE WATER FROM OVERTOPPING BASIN.
3. KEEP AS FAR FROM WETLANDS AS PRACTICAL.
4. CLEAN AND REMOVE AS SOON AS DEWATERING IS COMPLETE.

BMP PICTURE

BMP # 32
DEWATERING BASIN
(SMALL SCALE)

BMP PICTURE

NOTE:

1. EXACT SIZE, LOCATION AND DESIGN IS DEPENDANT ON SITE CONDITIONS, AND LOCAL AND STATE REGULATIONS. COORDINATE THIS BMP WITH NATIONAL GRID ENVIRONMENTAL SCIENTIST PRIOR TO CONSTRUCTION.

BMP DETAIL

SCALE: NONE

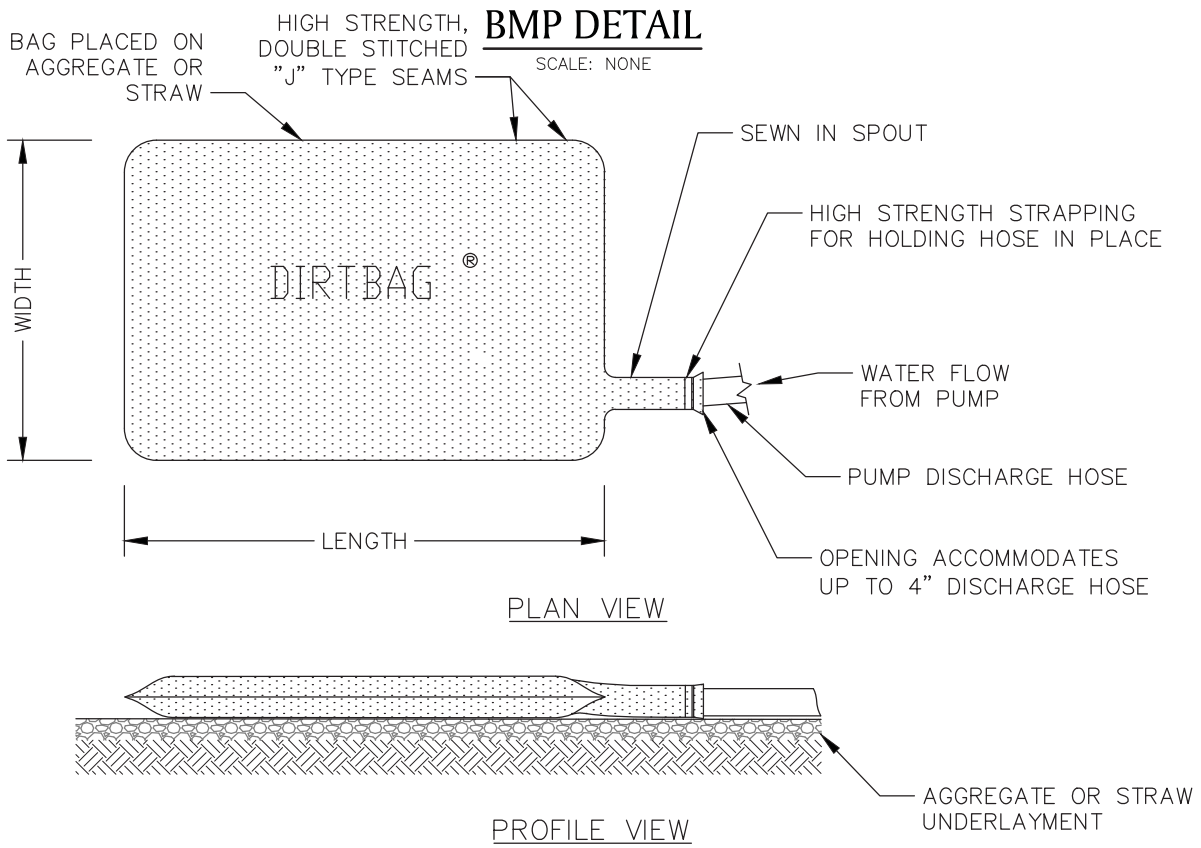

BMP PICTURE

* PICTURE AND DETAIL PROVIDED BY ACF ENVIRONMENTAL
APPROVED BY: VICE PRESIDENT, ENVIRONMENTAL SERVICES
PRINTED COPIES ARE NOT DOCUMENT CONTROLLED. FOR LATEST AUTHORIZED VERSION PLEASE REFER TO THE NATIONAL GRID ENVIRONMENTAL INFONET SITE.

BMP # 34
DIRTBAG *

File: Dirtbag.dwg

BMP DETAIL

SCALE: NONE

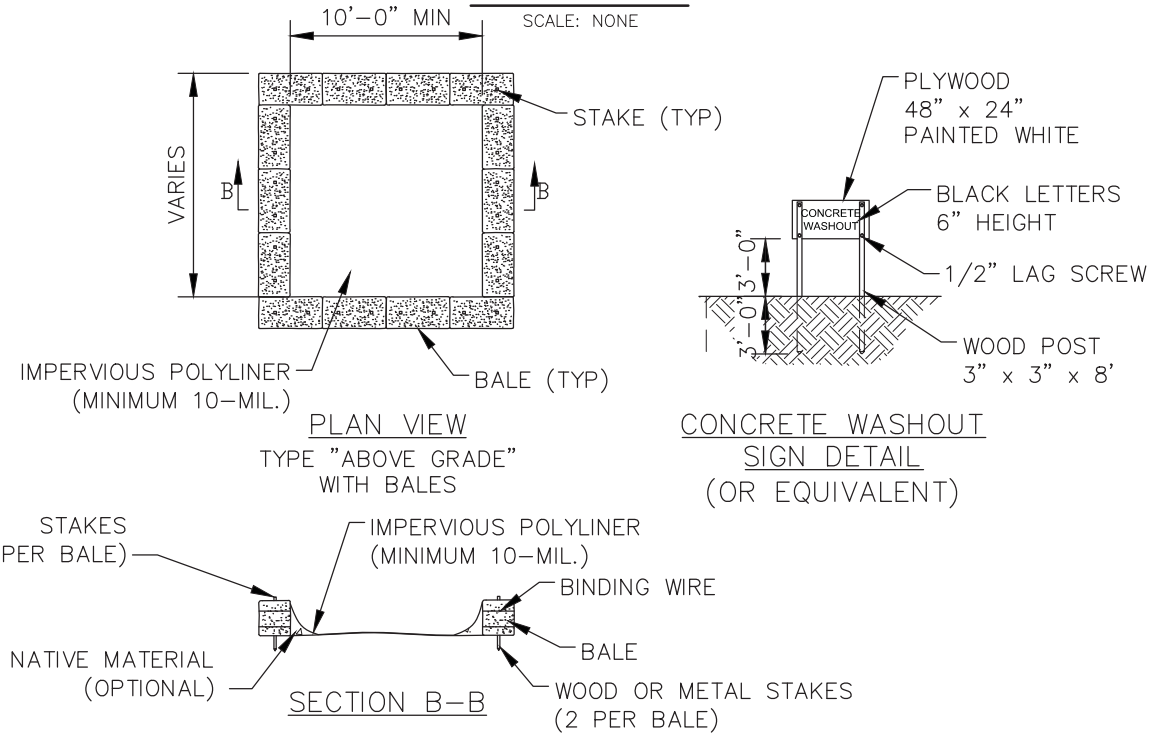

NOTES:

1. NUMBER OF BALES MAY VARY DEPENDING ON SITE CONDITIONS. COORDINATE SIZE AND LOCATION OF CONCRETE WASTE SUMP WITH NATIONAL GRID ENVIRONMENTAL SCIENTIST.
2. KEEP AS FAR FROM DRAINAGE CHANNELS AND WETLAND AREAS AS PRACTICAL.
3. SUMPS TO BE CLEANED AND WASTE CONCRETE REMOVED AND PROPERLY DISPOSED OF UPON COMPLETION OF WORK.
4. SEE ADDITIONAL NOTES ON BMP #35.

BMP PICTURE

BMP DETAIL

SCALE: NONE

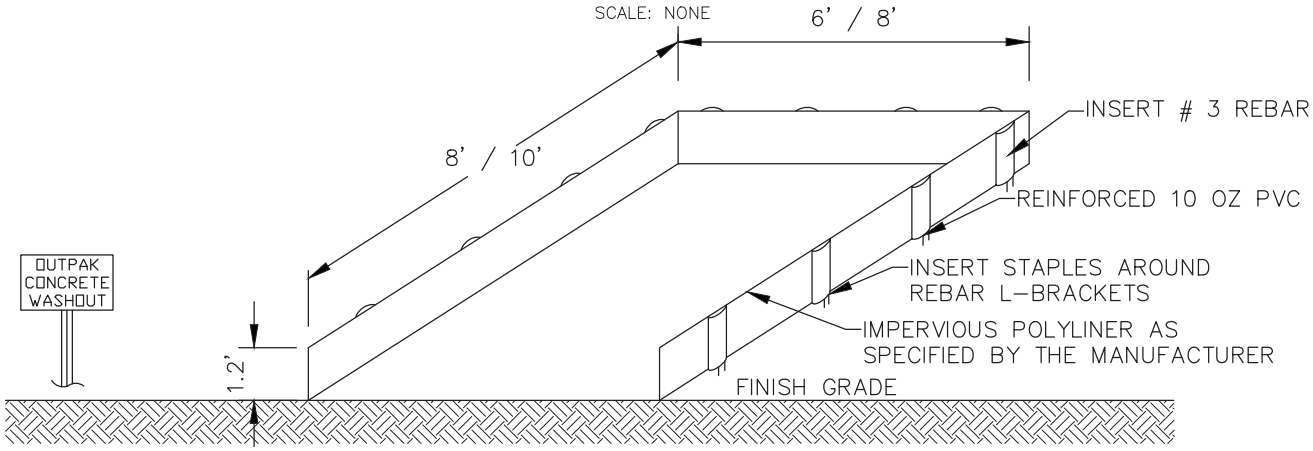

CROSS SECTION

NOTES:

1. PRODUCT TO BE OUTPAK PVC CONCRETE WASHOUT OR APPROVED EQUAL BY NATIONAL GRID ENVIRONMENTAL SCIENTIST.
2. THE CONCRETE WASHOUT AREA SHALL BE INSTALLED PRIOR TO ANY CONCRETE PLACEMENT.
3. SIGNS SHALL BE PLACED AS NECESSARY TO CLEARLY INDICATE THE LOCATION OF THE CONCRETE WASHOUT.
4. THE CONCRETE WASHOUT AREA WILL BE REPLACED AS NECESSARY TO MAINTAIN CAPACITY FOR WASTE CONCRETE AND OTHER LIQUID WASTE.
5. WASHOUT RESIDUE SHALL BE REMOVED FROM THE SITE AND DISPENSED OF AT AN APPROVED WASTE SITE.
6. DO NOT MIX EXCESS AMOUNTS OF FRESH CONCRETE OR CEMENT ON-SITE.
7. DO NOT WASH OUT CONCRETE TRUCKS INTO STORM DRAINS, OPEN DITCHES, STREETS, OR STREAMS.
8. AVOID DUMPING EXCESS CONCRETE IN NON-DESIGNATED DUMPING AREAS.
9. LOCATE WASHOUT AREA AT LEAST 50' FROM STORM DRAIN, OPEN DITCHES, OR WATERBODIES. COORDINATE LOCATION WITH NATIONAL GRID ENVIRONMENTAL SCIENTIST.
10. WASH OUT WASTES INTO THE OUTPAK WASHOUT WHERE THE CONCRETE CAN SET, BE BROKEN UP, AND THEN DISPOSED OF PROPERLY.
11. A SECURE, NON-COLLAPSING, NON-WATER COLLECTING COVER MUST BE PLACED OVER CONCRETE WASHOUT PRIOR TO PREDICTED WET WEATHER TO PREVENT ACCUMULATION AND OVERFLOW OF PRECIPITATION.

BMP PICTURE

* PICTURE AND DETAIL PROVIDED BY OUTPAK WASHOUT

APPROVED BY: VICE PRESIDENT, ENVIRONMENTAL SERVICES

PRINTED COPIES ARE NOT DOCUMENT CONTROLLED. FOR LATEST AUTHORIZED VERSION PLEASE REFER TO THE NATIONAL GRID ENVIRONMENTAL INFONET SITE.

BMP # 36

OUTPAK CONCRETE WASHOUT *

File: Outpak_Washout.dwg

BMP DETAIL

SCALE: NONE

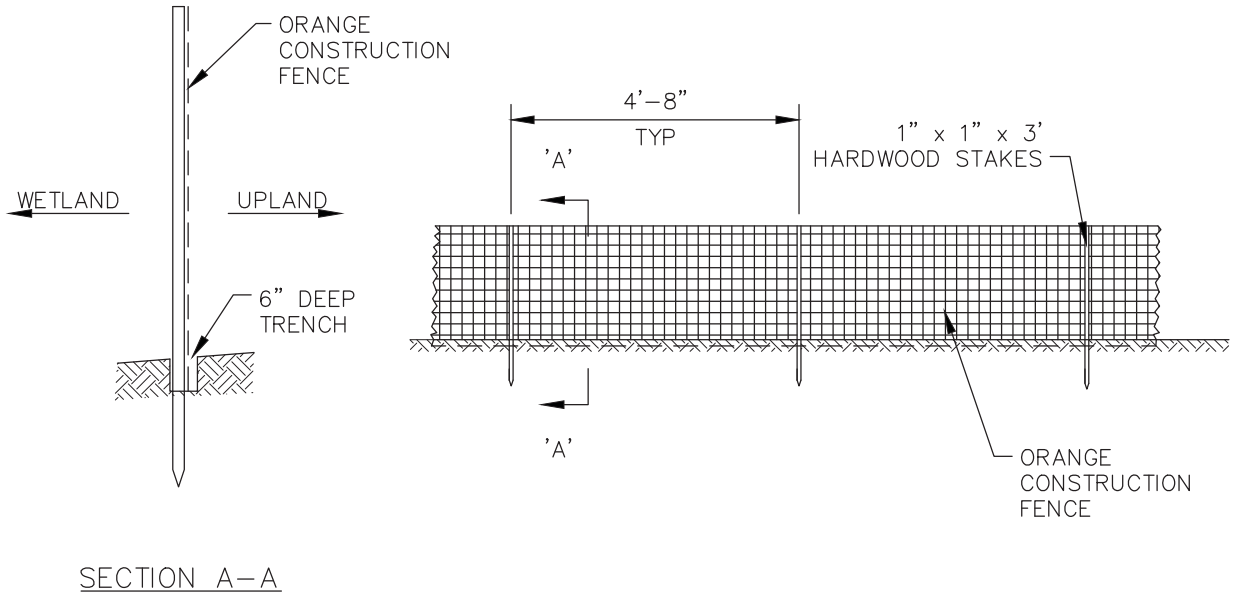

BMP PICTURE

File: Barrier_Fence.dwg

APPROVED BY: VICE PRESIDENT, ENVIRONMENTAL SERVICES
PRINTED COPIES ARE NOT DOCUMENT CONTROLLED. FOR LATEST AUTHORIZED VERSION PLEASE REFER TO THE NATIONAL GRID ENVIRONMENTAL INFONET SITE.

BMP # 37
BARRIER FENCE
(CONSTRUCTION FENCE)

BMP DETAIL

SCALE: NONE

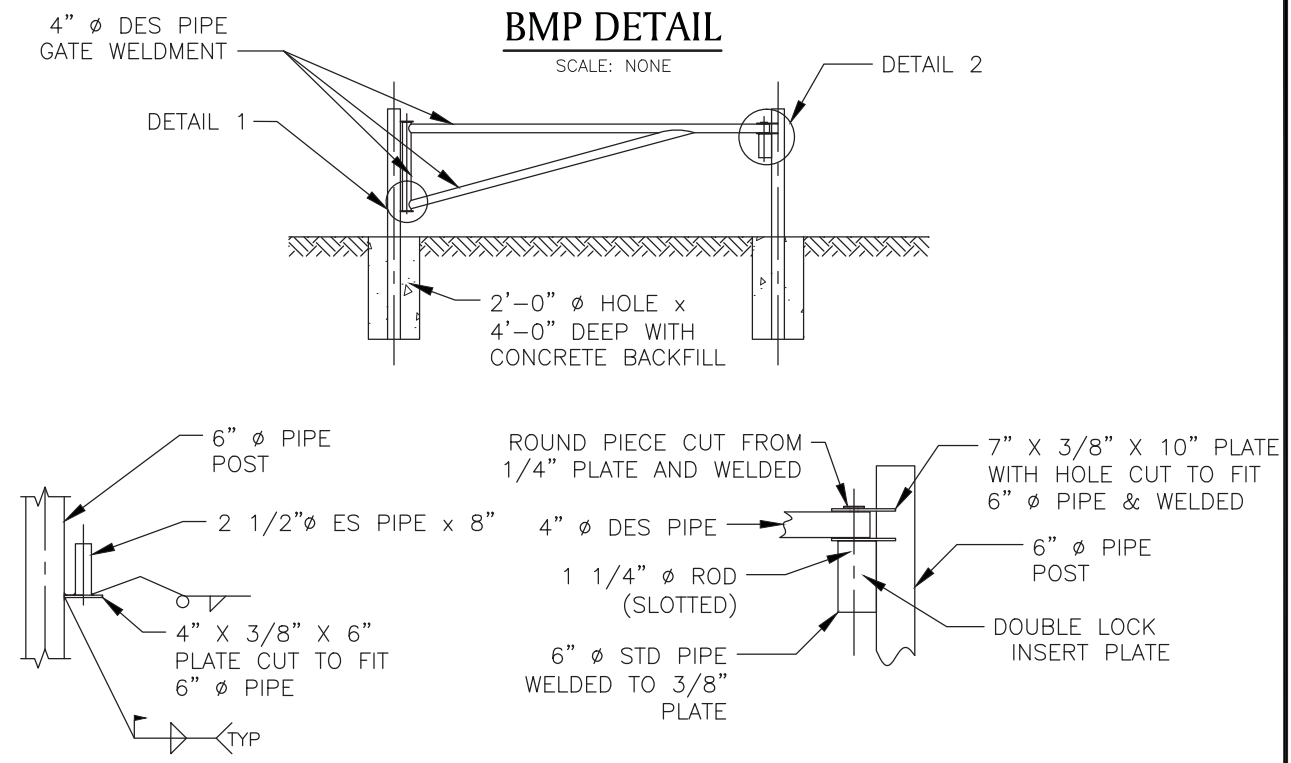

DETAIL 1

SIMILAR DETAIL AT TOP

DETAIL 2

NOTES:

1. ALL GATE STEEL PIPES SHALL BE IN ACCORDANCE WITH ASTM A-501, PLATES SHALL BE ASTM A-36.
2. ALL STEEL PIPES SHALL BE PRIMED WITH ZINC-CHROMATE PRIMER AND FINISHED WITH AN APPROVED OSHA "SAFETY YELLOW" TOP COAT COMPATIBLE WITH THE PRIMER AND FOR EXTERIOR EXPOSURE.
3. REFLECTORS SHALL BE SPACED AT 3 FEET ALONG THE LENGTH OF THE CROSSBAR AND BRACE
4. BACKFILL AT POSTS TO BE COMPACTED.

BMP PICTURE

BMP DETAIL

SCALE: NONE

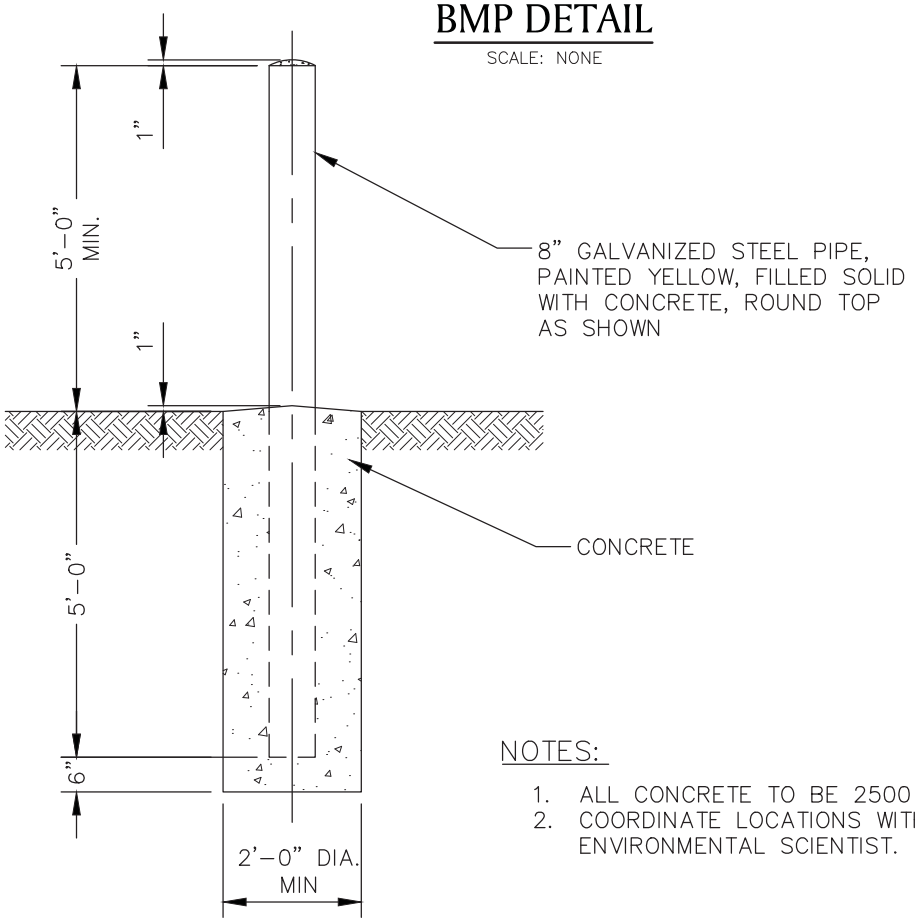

NOTES:

1. ALL CONCRETE TO BE 2500 P.S.I. MINIMUM.
2. COORDINATE LOCATIONS WITH NATIONAL GRID ENVIRONMENTAL SCIENTIST.

BMP PICTURE

BMP

Definition

The control of dust resulting from land-disturbing activities.

Purpose

To prevent surface and air movement of dust from disturbed soil surfaces that may cause off-site damage, health hazards, and traffic safety problems.

Conditions Where Practice Applies

On construction roads, access points, and other disturbed areas subject to surface dust movement and dust blowing where off-site damage may occur if dust is not controlled.

Design Criteria

Construction operations should be scheduled to minimize the amount of area disturbed at one time. Buffer areas of vegetation should be left where practical. Temporary or permanent stabilization measures shall be installed. No specific design criteria is given; see construction specifications below for common methods of dust control.

Water quality must be considered when materials are selected for dust control. Where there is a potential for the material to wash off to a stream, ingredient information must be provided to the local permitting authority.

Construction Specifications

A. Non-driving Areas – These areas use products and materials applied or placed on soil surfaces to prevent airborne migration of soil particles.

Vegetative Cover – For disturbed areas not subject to traffic, vegetation provides the most practical method of dust control (see Section 3).

Mulch (including gravel mulch) – Mulch offers a fast effective means of controlling dust. This can also include rolled erosion control blankets.

Spray adhesives – These are products generally composed of polymers in a liquid or solid form that are mixed with water to form an emulsion that is sprayed on the soil surface with typical hydroseeding equipment. The mixing ratios and application rates will be in accordance with the manufacturer's recommendations for the specific soils on the site. In no case should the application of these adhesives be made on wet soils or if there is a probability of precipitation within 48 hours of its proposed use. Material Safety Data Sheets will be provided to all applicators and others working with the material.

B. Driving Areas – These areas utilize water, polymer emulsions, and barriers to prevent dust movement from the traffic surface into the air.

Sprinkling – The site may be sprayed with water until the surface is wet. This is especially effective on haul roads and access routes.

Polymer Additives – These polymers are mixed with water and applied to the driving surface by a water truck with a gravity feed drip bar, spray bar or automated distributor truck. The mixing ratios and application rates will be in accordance with the manufacturer's recommendations. Incorporation of the emulsion into the soil will be done to the appropriate depth based on expected traffic. Compaction after incorporation will be by vibratory roller to a minimum of 95%. The prepared surface shall be moist and no application of the polymer will be made if there is a probability of precipitation within 48 hours of its proposed use. Material Safety Data Sheets will be provided to all applicators working with the material.

Barriers – Woven geotextiles can be placed on the driving surface to effectively reduce dust throw and particle migration on haul roads. Stone can also be used for construction roads for effective dust control.

Windbreak – A silt fence or similar barrier can control air currents at intervals equal to ten times the barrier height. Preserve existing wind barrier vegetation as much as practical.

* BMP INFORMATION FROM "NEW YORK STANDARDS AND SPECIFICATIONS FOR EROSION AND SEDIMENT CONTROL (AUGUST, 2005)." INFORMATION OBTAINED VIA WEBSITE: http://www.dec.ny.gov/chemical/29066.html

BMP DETAIL

SCALE: NONE

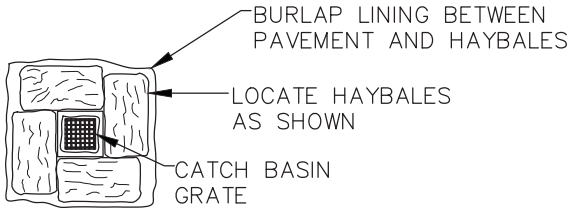

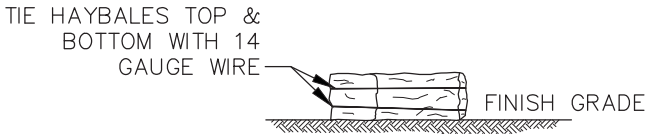

NOTES:

1. SURROUND STREET DRAINAGE STRUCTURE INLET WITH HAY BALES PRIOR TO CONSTRUCTION AND MAINTAIN UNTIL CONSTRUCTION IS COMPLETED. ACCUMULATED SEDIMENTS SHALL BE REMOVED.
2. HAYBALES PLACED ON PAVEMENT SHALL HAVE BURLAP PLACED BETWEEN PAVEMENT AND HAYBALE

BMP PICTURE

File: CB_Inlet_Protection.dwg

BMP # 41
CATCH BASIN INLET PROTECTION

BMP DETAIL

SCALE: NONE

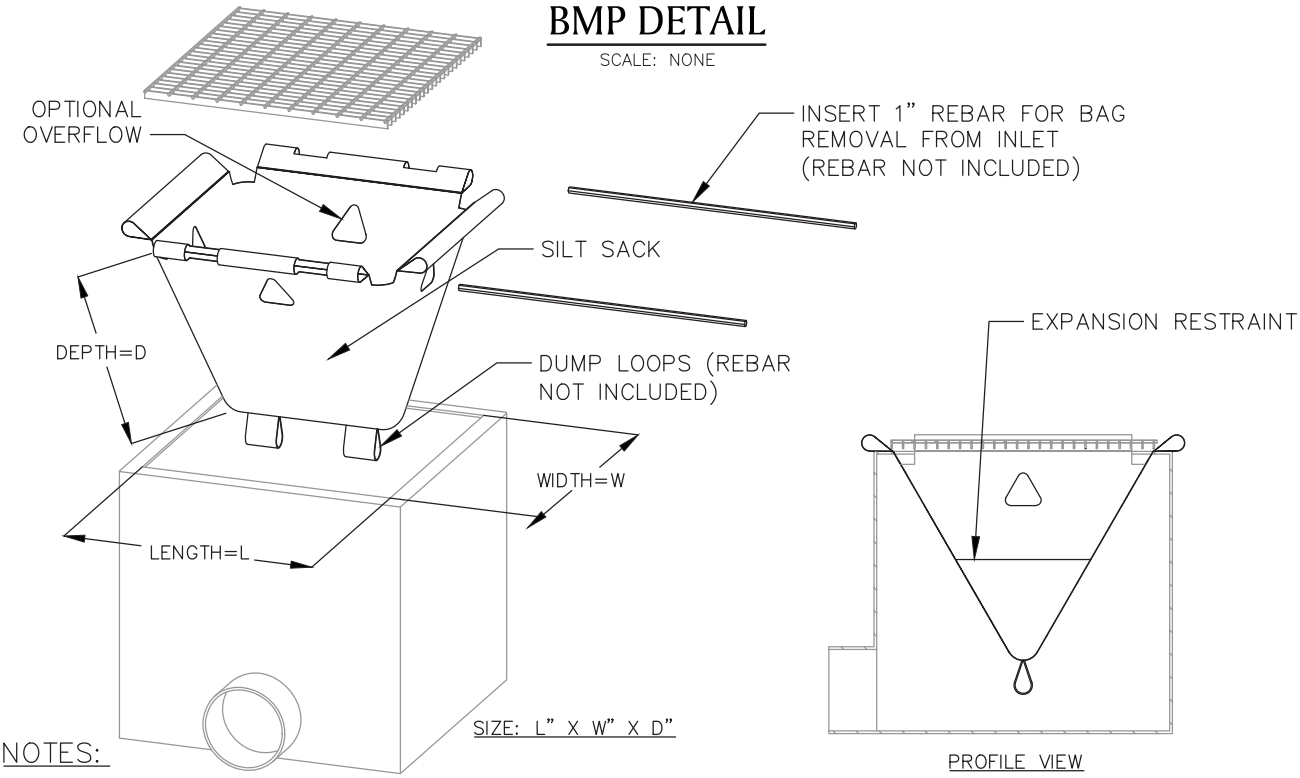

NOTES:

1. PRODUCT TO BE SILT SACK OR APPROVED EQUAL BY NATIONAL GRID ENVIRONMENTAL SCIENTIST.
2. THE USE OF A SILT SACK OPTIONAL OVERFLOW AND OVERALL DIMENSIONS ARE TO BE COORDINATED WITH A NATIONAL GRID ENVIRONMENTAL SCIENTIST.

BMP PICTURE

* DETAIL PROVIDED BY ACF ENVIRONMENTAL

APPROVED BY: VICE PRESIDENT, ENVIRONMENTAL SERVICES

PRINTED COPIES ARE NOT DOCUMENT CONTROLLED. FOR LATEST AUTHORIZED VERSION PLEASE REFER TO THE NATIONAL GRID ENVIRONMENTAL INFONET SITE.

BMP # 42
SILT SACK *

File: SILT SACK.dwg

BMP DETAIL

SCALE: NONE

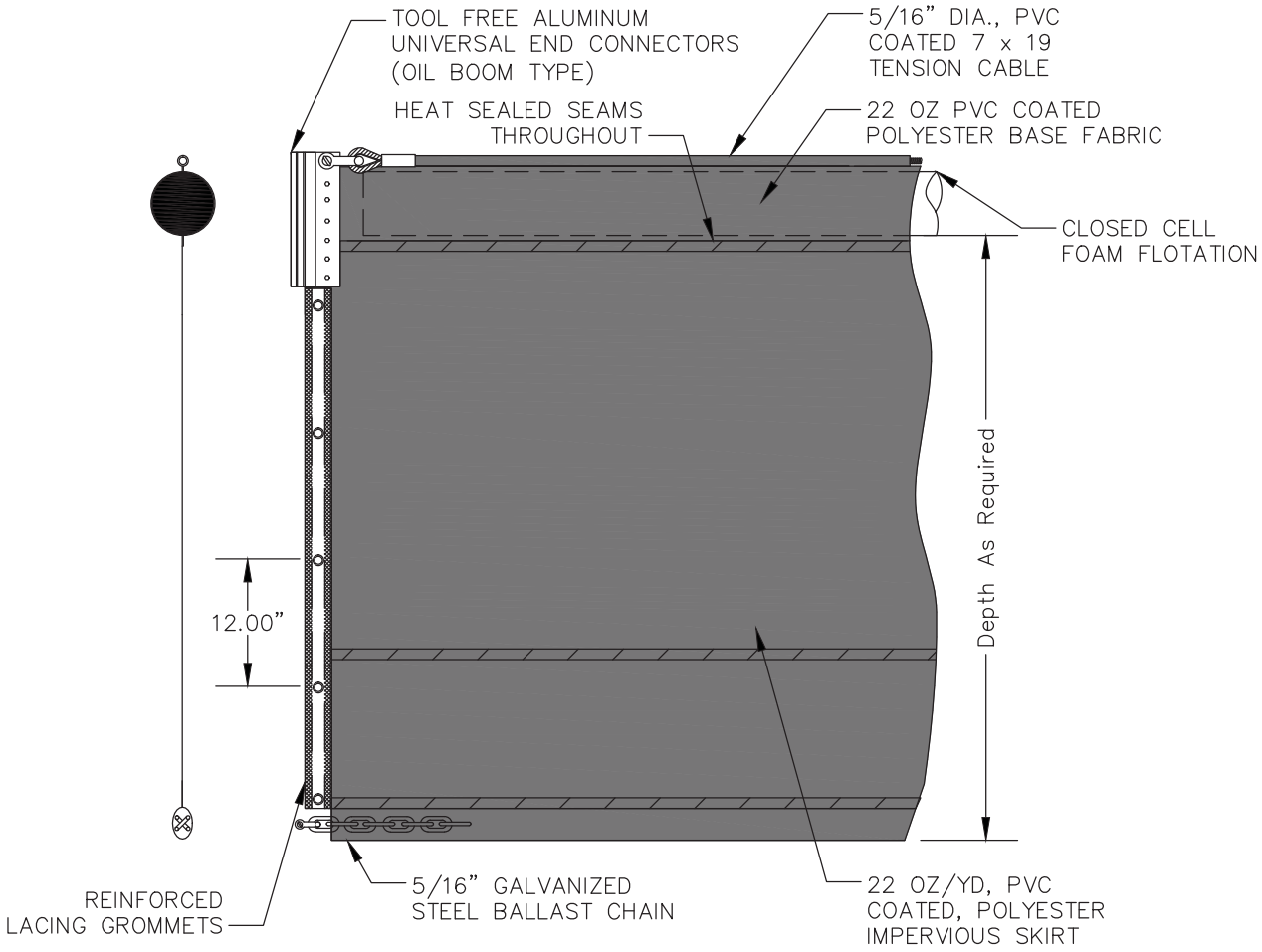

BMP PICTURE

* DETAIL PROVIDED BY BROCKTON EQUIPMENT / SPILLDAM INC.
APPROVED BY: VICE PRESIDENT, ENVIRONMENTAL SERVICES
PRINTED COPIES ARE NOT DOCUMENT CONTROLLED. FOR LATEST AUTHORIZED VERSION PLEASE REFER TO THE NATIONAL GRID ENVIRONMENTAL INFONET SITE.

BMP # 43
TURBIDITY CURTAIN *

File: Turbidity_Curtain.dwg

PURPOSE

To document the procedure to dewater excavations, while eliminating discharge of sediment to surface waters or sewer systems.

SCOPE

This guidance document applies to the handling of water from all excavations dug by National Grid or its contractors during everyday/operational maintenance and construction of underground utilities. It does not specifically apply to large construction projects for which individual permits or approvals for dewatering have been obtained. For this type of work, refer to the specific procedures and best management practices provided in EP No. 3 and its associated EGs.

RESPONSIBILITIES

It is the responsibility of the person conducting the dewatering activities to ensure that this procedure is followed.

PROCEDURE

Release of sediment or dirt into catch basins, sewers or surface waters and wetlands is prohibited to protect the environment as prescribed by federal, state and local regulatory agencies throughout our operating regions. Release of sediment with water into sewer works is also prohibited by local public works departments and water treatment facilities to preserve the integrity of their systems.

Water found in all excavations must be assessed for obvious signs of contamination (e.g., discoloration, odor, signs of oil, the presence of liquids from broken gas mains or sewer pipes, etc.) prior to discharge. **If shown to be contaminated**, water cannot be pumped to the ground, catch basin, sewer system, or surface water. If contamination is encountered in any excavation, contact your Environmental Engineer for further instruction. Water exhibiting signs of contamination will typically need to be pumped by a contractor for proper off-site disposal.

If the assessment shows **NO evidence of contamination**, best management practices (BMPs) still need to be followed in order to avoid pumping sediment-laden water from the excavation. One or more of the procedures below must be utilized when pumping water from excavations. The BMP(s) selected must be monitored for effectiveness in avoiding the discharge of sediment and, if they are ineffective, additional or different BMPs must be used:

- The first choice to pump clean water is in an upland, unpaved area where water can infiltrate back into the ground without creating runoff. Although situations where this practice can be followed will be uncommon, it should still be sought out;

- Avoid pumping sediment-laden water from the excavation by constructing an effective sump at the base of the excavation where the pump would be placed. An effective sump would be gravel-lined and result in a discharge without significant amounts of sediment;

- Use filter fabric over storm drains and sewer inlets (see Fig. 1);

- Protect all surface waters and wetlands from sediment deposit using straw bales and a silt fence between the excavation and the body of water or wetland (see Fig. 2);

- Use a filter bag/sock or pump box at the discharge end of the dewatering pump hose to capture all sediment (see Fig. 3); or

- For large projects, construct a dewatering pit using straw bales and filter fabric to filter the water discharge (see Fig. 4).

- For excessive water handling, consider renting a mobile settling tank (frac tank).

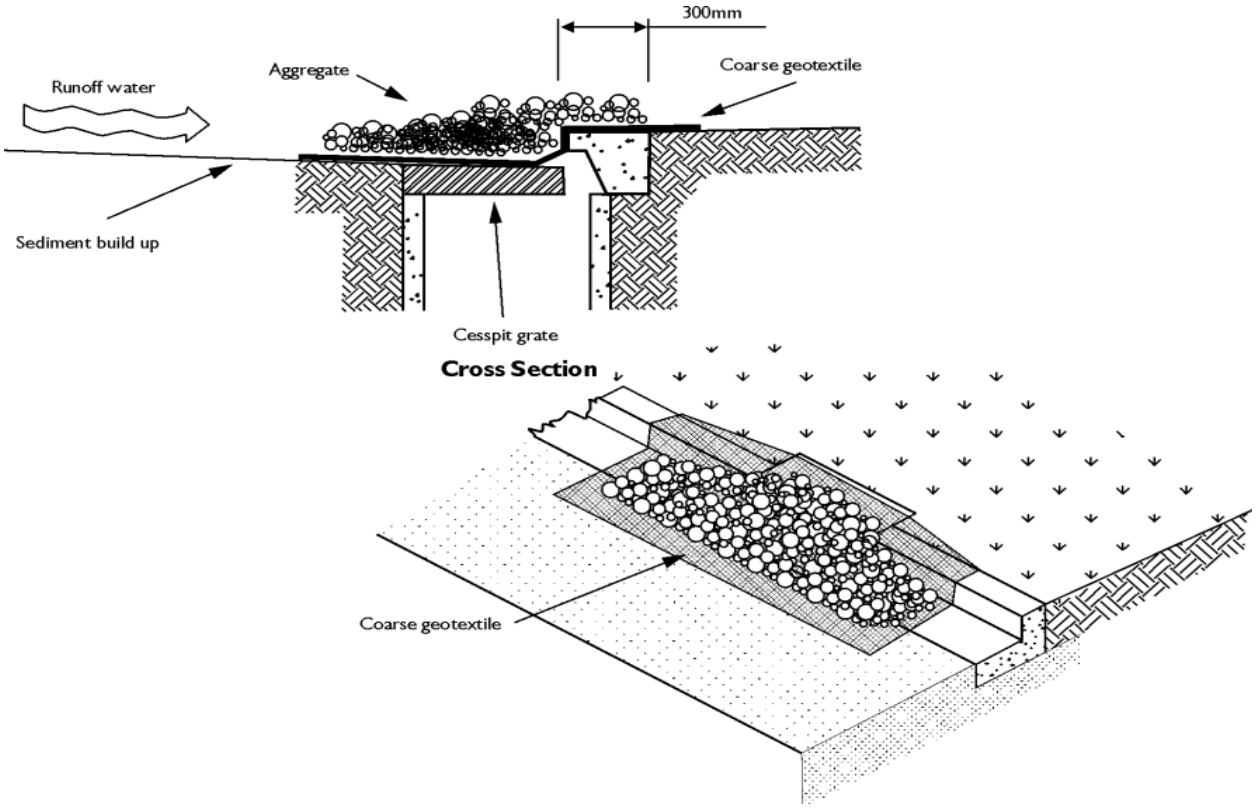

Fig. 1: Example of Catch Pit Inlet Protection

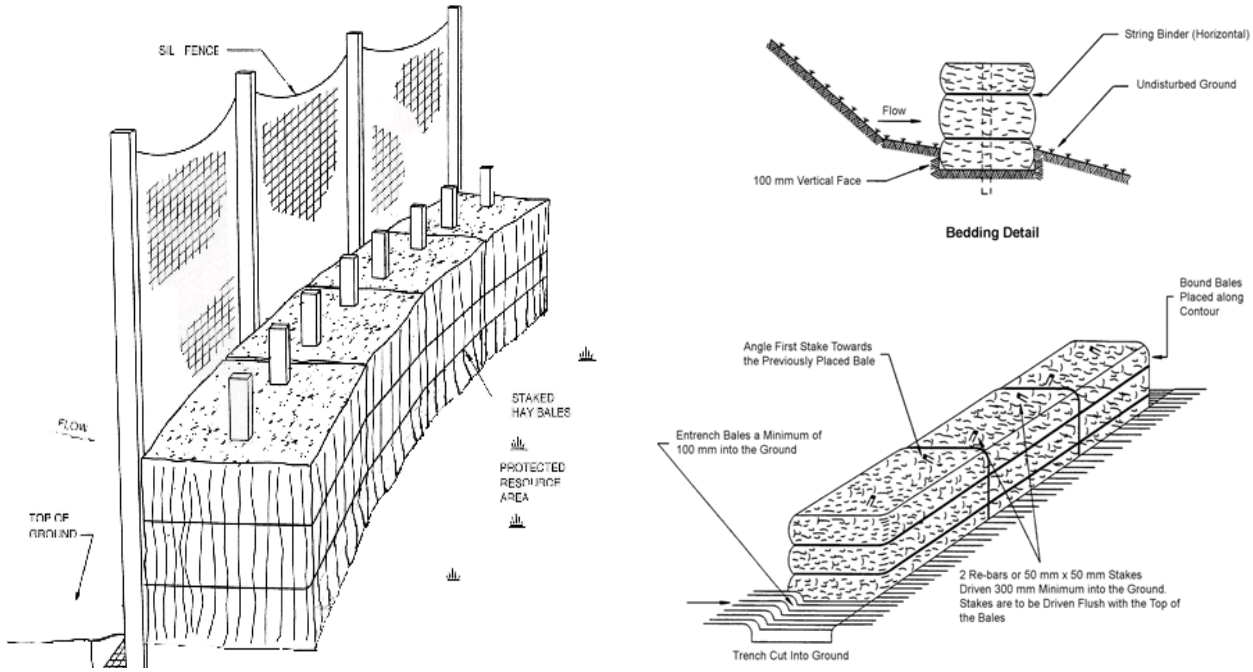

Fig. 2: Examples of Straw Bale/Silt Fence Barrier and Straw Bale Dike

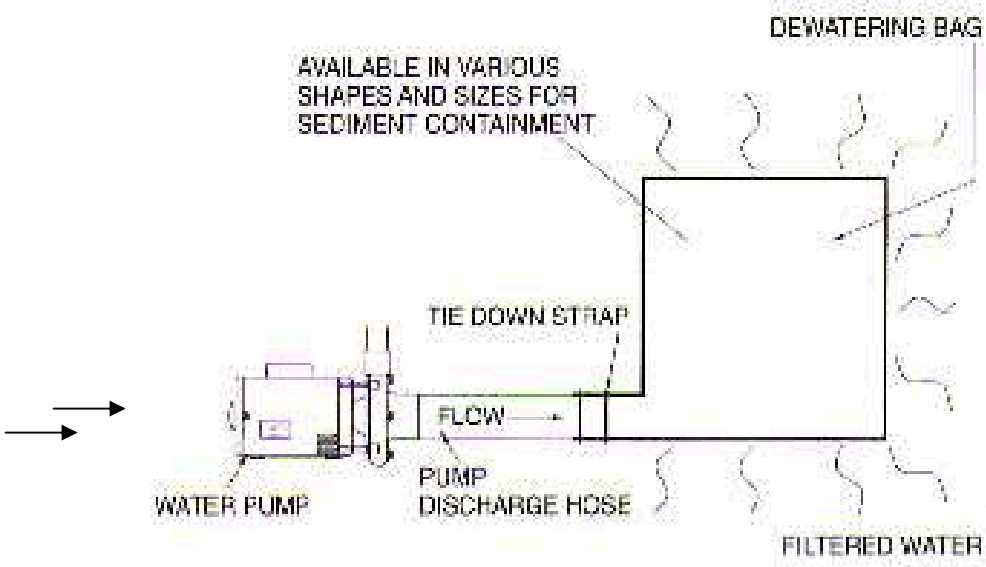

Fig. 3: Example of Filter Sock or Filter Bag Use

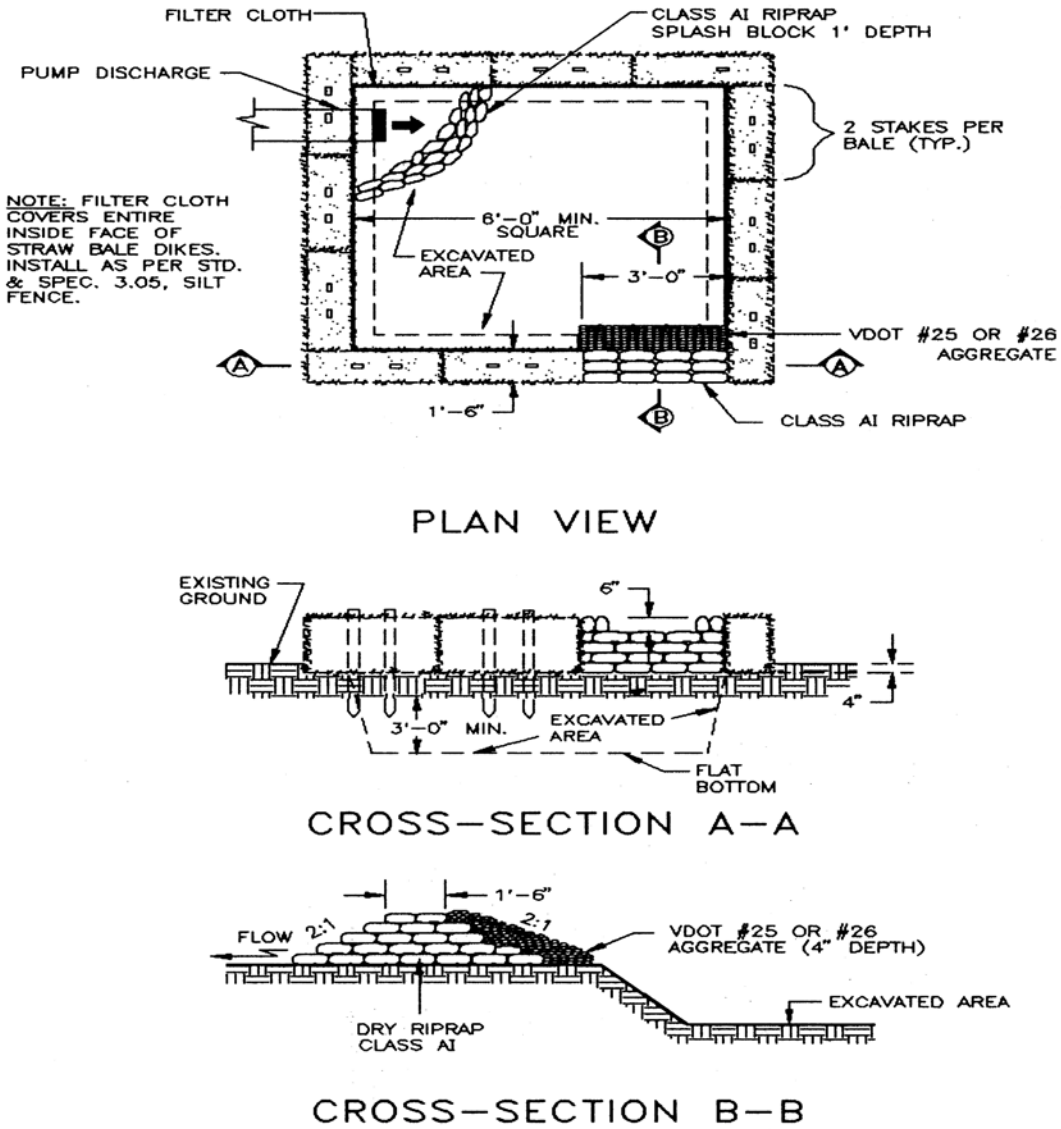

Fig. 4: Example of Dewatering Pit Design

If you have any questions regarding how to obtain materials used in the above water management practices, contact your Environmental Engineer.

Record of Change		
Date of Review/Revision:		
Revision	**Date**	**Description**
0	01/13/11	New EG to document the procedure to dewater excavations, while eliminating discharge of sediment to surface waters or sewer systems.

Appendix E

Spill Response Procedure

PURPOSE: The purpose of this guidance is twofold:

1. Provide instructions to field crews on immediate actions to take in the event of an oil or hazardous materials spill; and
2. Provide clarity on the roles and responsibilities of all company employees and contractors who may be involved in spill response activities.

SCOPE: It is the responsibility of all company personnel and contractors to conduct their work activities with a sufficient level of diligence to protect themselves, the public, and the environment. This guidance document applies in the event of an oil or hazardous materials spill in Massachusetts. Note that all mercury spill response procedures are more specifically detailed in EG-504MA, and shall follow that guidance document.

RESPONSIBILITIES:

Dispatch – Upon notification being provided to Dispatch, they will be responsible for contacting the on-call Environmental Scientist/Engineer and providing a basic description of spill site conditions and the characteristics of the spill.

Environmental Scientist/Engineer – The Environmental Scientist/Engineer shall have overall responsibility for directing and coordinating spill cleanup actions and shall ensure that the cleanup is conducted in accordance with federal, state, and local regulations. The Environmental Scientist/Engineer may not be on-site to direct response activities at all spill sites, and may delegate on-site responsibilities to the Local Area Supervisor or an environmental consultant/contractor; however, the overall responsibility for directing and coordinating spill cleanup actions remains with the Environmental Scientist/Engineer. The Environmental Scientist/Engineer shall make every attempt to be on-site at all significant events, as outlined in EP-5. The responsibilities of the Environmental Scientist/Engineer are more fully detailed in EP-5.

Field Personnel – All employees are responsible for immediately reporting any release of oil or hazardous materials to their supervisor, dispatch, or the Environmental Scientist/Engineer. As they may frequently be "first responders" in the event of a spill, field crews shall conduct immediate spill response to minimize the extent of the spill and the potential for personal or public exposure as documented in this procedure.

Local Area Supervisor – The Local Area Supervisor shall work with the Environmental Scientist/Engineer to help coordinate spill response. The supervisor shall be responsible for ensuring that the Field Personnel carry out their responsibilities as documented in this procedure.

Safety Department Representative – The Safety Department representative shall coordinate with the Environmental Scientist/Engineer and Field Supervisor during incidents involving employee or public

exposure to oil or hazardous materials. The Safety Department representative may be asked to help facilitate communications regarding the exposure and the effects of exposure to affected parties.

PROCEDURE:

This section details the chronological order of an oil or hazardous materials spill response procedure by responsible areas. However, appropriate response actions should be dictated by the specifics of the incident. Therefore, the order of the response and the responding area may vary accordingly.

Field Personnel

Prior to proceeding with any of the spill assessment and response activities below, determine if such activities can be performed safely. Such activities may require donning PPE in accordance with Safety Procedure F-611 (for incidents involving PCBs) or other applicable safety guidance.

- Determine what material, and what quantity, has spilled or is spilling;
- Stop the spill;
- Control the spill and secure the area:
  - Use absorbent/containment materials to minimize or eliminate the spread of contamination.
  - Do not walk through or touch the spilled material; step away from the spill area;
  - Using physical barriers, visible warnings (i.e., caution tape, cones, etc.), or other means, restrict access to the spill area. Prevent unauthorized persons from entering the area.
- Initiate emergency response by contacting the Local Area Supervisor or Dispatch. This should be done immediately after the spill site has been secured through the actions listed above. If possible (if more than one person is at the spill site), it should be done concurrently with the spill/site control activities. Prompt reporting is imperative since the Massachusetts Department of Environmental Protection (MA DEP) requires that they be notified within two hours of the actual spill event. The following information should be conveyed to the Local Area Supervisor/Dispatch:
  - Location of release;
  - Material that was spilled;
  - Estimated amount spilled;
  - When the spill was discovered;
  - What caused the release;
  - A description of the spill area; and
  - A description of impacted receptors.
- Perform a thorough assessment of what areas and/or items have become contaminated by the spilled material. Document the assessment and ensure that any contaminated materials or items do not leave the spill site – this includes boots, clothing, tools, and vehicles. “Quarantine” any vehicles or items contaminated, or suspected to be contaminated. These items should be placed within a restricted access area and shall not leave the site until assessed and decontaminated as

necessary. This assessment may be facilitated by using the Initial Release Characterization Report form in Appendix A.

Dispatch

- Receive call from Field Personnel or Local Area Supervisor and obtain the information on the checklist provided as Appendix B.
- Initiate notification to the Environmental Scientist/Engineer.
- Provide a basic description of spill site conditions and the characteristics of the spill.

Local Area Supervisor

The Local Area Supervisor's primary responsibility shall be to ensure that Field Personnel carry out their responsibilities as outlined above. In the absence of an Environmental Scientist/Engineer on-site, the Local Area Supervisor may be requested to report to the location of the spill to obtain a first-hand account of site conditions. The Local Area Supervisor will:

- Determine the facts of spill situation and establish and implement the appropriate make-safe response, which will consider:
    - Control of employee and public exposure to contamination; and
    - Minimizing contamination (e.g., to a larger area; to company vehicles, tools, equipment; to employees' clothing).
- Perform a thorough assessment of what areas and/or items have become contaminated by the spilled material. Document the assessment and ensure that any contaminated materials or items do not leave the spill site.
- As appropriate and in conjunction with the Environmental Scientist/Engineer or their designated environmental consultant/contractor, determine the release of employees from the site. No employee who was in the spill area may leave the spill location until:
    - Clothing, boots, tools, equipment and vehicles have been assessed for possible contamination; and,
    - Contaminated items/articles have been decontaminated or disposed of.
    - Clothing or boots that cannot be removed and left on site should be covered (e.g., with tyvek coveralls and duck boots) and, upon return to the Operations Center, should be removed and disposed of as a contaminated material.
    - Upon removal of contaminated clothing and/or PPE, the employee should shower at the Operations Center.

Environmental Scientist/Engineer

- Assume responsibility for directing spill cleanup.
- Assess the scope of contamination, including property and personnel.
- Determine if release is reportable and contact Massachusetts Department of Environmental Protection or other applicable regulatory agency. Use EG-502MA as guidance. Perform notification as necessary.
- Communicate with owners of property or items contaminated by the spill;

- Communicate with employees exposed to the spilled material. With assistance from the Safety Department Representative, answer any questions employees may have regarding exposure and cleanup.
- Coordinate clean up with the spill response contractor and environmental consultant, as applicable, to:
  - Assess and decon (or dispose of) all affected areas, including items of the property owner as well as National Grid employees' clothing, boots, tools and/or equipment;
  - Assess and, as necessary, decon company personnel and vehicles; and,
  - Provide or obtain from environmental consultant details of clean up, which shall include as applicable:
    - Personnel on site
    - Vehicles on site
- Enter the incident into National Grid's Incident Management System (IMS).
- Consult EP-5 for additional responsibilities of the Environmental Scientist/Engineer.

Safety Department Representative
Upon request from the Environmental Scientist/Engineer, aid with communications regarding the exposure and the effects of exposure to affected parties.

Record of Change		
Date of Review/Revision:		
Revision	**Date**	**Description**
3	04/27/12	Updated EG with a complete rewrite. Rewrite focused on providing clear guidance on roles and responsibilities during initial spill response.
4	5/3/13	Added more specific guidance for Dispatch.

Appendix A

Initial Release Characterization Report		
To be used by field personnel or supervisor to document site conditions immediately following a spill of oil or hazardous material		
Name:	Department:	Date/Time of Release:
Source of Release:	Material Released:	Quantity Released:
Release Location Address:		
Cause and Brief Description:		
Areas/Receptors Affected (check all that apply): ☐ Street/Driveway/Sidewalk ☐ Soil/Grass-Covered Area ☐ Catch Basin ☐ River/Stream/Lake/Waterbody ☐ Wetland ☐ Company-Owned Property/Items/Vehicles. Specifically list all items affected: _____ _____ _____ ☐ Non-Company-Owned Property/Items/Vehicles. Specifically list all items affected: _____ _____ _____ ☐ Employee or Customer Exposure. Specifically list all persons affected: : _____ _____ _____ ☐ Other (describe):_____		
Description of Initial Site Control Activities (includes steps taken to restrict access to contaminated areas and any list any items "quarantined" as contaminated):		
Description of Initial Containment Activities:		
Company Personnel on Site:		
Company Vehicles on Site:		

Upon completion, provide this form to the Environmental Scientist/Engineer.

.

Appendix B
Information for Dispatch to Obtain Upon Receipt of a Call of a Spill

- **Caller's contact information**
  - Name:_____
  - Phone Number:_____
- **Location of release**
  - Pole Location/Street Address:_____
- **Material that was spilled**
  - Oil/Hazardous Material Spilled:_____
  - PCB Content, if Known:_____
- **Estimated amount spilled:**_____
- **When the spill was discovered**
  - Date:_____
  - Time:_____
- **What caused the release:**_____
- **A description of the spill area**
  - Size of staining/area affected:_____
  - Materials/Property/Buildings/Vehicles Affected:_____
- **A description of impacted receptors**
  - Any Sensitive Receptors? (e.g., surface water, wetlands, catch basins, farmland?):_____
- **Any Containment Measures Employed?**_____

.

SPILL RESPONSE PROCEDURES & NOTIFICATIONS

Below is a summary of procedures to follow and notifications to make in the event of a spill. **Please note that the EG-501 series details steps to take in the immediate moments after a spill. This document supplements those activities, as well as those activities in EP-5 that further guide the actions of the Environmental Scientist/Engineer.**

SPILLS TO WATER

Oil spills to water are Category 1 classified in accordance with National Grid Environmental Procedure No. 15, if they are likely to result in an enforcement action from a regulatory agency.

If any quantity of oil, regardless of PCB content or other hazardous material, is released to water (*wetlands, streams, lakes, ponds, storm or sanitary sewer*) contact:

DEP	ASAP (No later than 2 hours)
NRC	Within 2 hours
LEPC	Within 2 hours
Local Fire Dept.	Within 2 hours
Clean-up Contractor	ASAP

If any quantity of oil with concentrations of PCBs ≥50 ppm or greater additionally notify:

EPA	Within 24 hours

SPILLS TO GROUND

Spills of over 250 gallons or containing 1 pound or PCBs ≥ 500 ppm are Category 1 classified in accordance with National Grid Environmental Procedure No. 15.

If 10 or more gallons of transformer oil with PCBs ≥2 ppm, or any other oil (e.g., hydraulic fluid, motor oil, etc.), are released to ground (soil, pavement) contact:

DEP	ASAP (No later than 2 hours)
Local Fire Dept.	Within 2 hours
Clean-up Contractor	ASAP

If PCB concentrations are ≥50 ppm or unknown, additionally notify:

LEPC	Within 2 hours

If ***any quantity*** of oil is released to ground with concentrations of ***PCBs ≥500 ppm*** contact:

DEP	ASAP (No later than 2 hours)
LEPC	Within 2 hours

Local Fire Dept.	Within 2 hours
Clean-up Contractor	ASAP

If PCB concentrations are between *50-499 ppm and over 2,700 gallons* are released or PCB concentrations are *≥500 ppm , and 270 gallons* are released, *additionally notify*:

EPA	Within 24 hours

If 25 or more gallons of transformer oil, with PCBs < 2 ppm are released to ground (soil, pavement) contact:

DEP	ASAP (No later than 2 hours)
Local Fire Dept.	Within 2 hours
Clean-up Contractor	ASAP

SPILLS TO VEGETABLE GARDENS, FARM LAND, GRAZING LAND

If any quantity of oil with detectable levels of PCBs is released to gardens, farms, or grazing land, contact:

DEP	ASAP (No later than 2 hours)
Local Fire Dept.	ASAP
Clean-up Contractor	ASAP
Environmental Engineer/Scientist	ASAP

If concentrations of PCBs are ≥**50 ppm**, additionally contact:

EPA	Within 24 hours
LEPC	Within 2 hours

AGENCY TELEPHONE NUMBERS

MASSACHUSETTS DEPARTMENT OF ENVIRONMENTAL PROTECTION (MA DEP)
MASSACHUSETTS EMERGENCY MANAGEMENT AGENCY (MEMA)

MA DEP / MEMA 24 hours per day	**888.304.1133**

NOTE: THE MEMA DISPATCHER WILL ROUTE CALL TO APPROPRIATE MA DEP REGION.

NATIONAL RESPONSE CENTER (NRC)	**800.424.8802**
ENVIRONMENTAL PROTECTION AGENCY (EPA)	**617.223.7265**

LOCAL EMERGENCY PLANNING COMMITTEES (LEPCs)

MUNICIPALITY	CHAIRPERSON	PHONE NUMBER
Abington	Chief David Majenski	(781) 878-3232
Acton	Chief Robert Craig	(978) 264-9645
Adams	John Morocco	(413) 662-3102
Alford	Doreen Hutchinson	(413) 528-0790 x3031
Amesbury	Chief James Broderick	(978) 388-8185
Andover	Jeff Coco/James Michitson	(978) 682-5212
Arlington	Chief William Middlemiss	(781) 862-0272
Ashburnham	James Wright	(978) 249-8275
Athol	James Wright	(978) 249-8275
Attleboro	Bob McDonald	(508) 223-2220
Auburn	Chief William Whynot	(508) 832-7800
Avon	Carl S. Fisher	(508) 583-5361
Ayer	William Shute	(978) 804-2084
Barnstable	Chief George Baker	(508) 375-6618
Barre	James Wright	(978) 249-8275
Bedford	Chief William Middlemiss	(781) 862-0272
Belchertown	Lt. Mike Spanknebel	(413) 584-0883
Bellingham	James Haughey	(508) 928-1007
Belmont	Chief William Middlemiss	(781) 862-0272
Berlin	Chief John T. Fleck	(978) 365-3502
Beverly	Dep. Chief James Coughlin	(978) 531-3447
Billerica	Mark Boldrighini	(978) 459-5552
Blackstone	Chief Michael Sweeney	(508) 883-1030
Bolton	Chief John T. Fleck	(978) 365-3502
Boston	Captain James Bruuynell	(617) 343-2116
Bourne	Chief George Baker	(508) 375-6618
Braintree	Chief Kenneth McHugh	(781) 843-3602 x4405
Brewster	Chief George Baker	(508) 375-6618
Boylston	Bruce Baker	(978) 422-6253
Boxborough	Chief Geoffrey Neagle	(978) 263-1116
Boxford	Robert Hazelwood	(978) 887-3135
Bridgewater	Herb Lemon	(508) 697-6191
Brimfield	Robert Corry	(413) 245-7334
Brockton	Morton Schleffer	(508) 588-7871
Brookfield	Joe Gadbois	(508) 867-6420

MUNICIPALITY	CHAIRPERSON	PHONE NUMBER
Brookline	Chief William Middlemiss	(781) 862-0272
Burlington	Chief William Middlemiss	(781) 862-0272
Carlisle	Chief David Flannery	(978) 369-2888
Charlemont	John Taylor	(413) 774-3167
Charlton	John Hart	(508) 765-9771
Chatham	Chief George Baker	(508) 375-6618
Chelmsford	Mark Boldrighini	(978) 459-5552
Chelsea	Captain Richard Tustin	(781) 729-1802
Cheshire	John Morocco	(413) 662-3102
Clarksburg	John Morocco	(413) 662-3102
Clinton	Chief John T. Fleck	(978) 365-3502
Cohasset	Chief Robert Silvia	(781) 383-0616
Concord	Chief Kenneth MacLean	(978) 443-2239
Danvers	Dep. Chief James Coughlin	(978) 531-3447
Dennis	Chief George Baker	(508) 375-6618
Dighton	Jeffrey Allie	(508) 669-6611
Douglas	Pauline Labrecque	(508) 476-2267
Dracut	Mark Boldrighini	(978) 459-5552
Dudley	John Hart	(508) 765-9771
Dunstable	William Shute	(978) 804-2084
East Bridgewater	Deputy Fairburn	(508) 378-2071
East Brookfield	Jason Messenger	(508) 867-6575
East Longmeadow	Brian Falk	(413) 525-5400 x 420
Eastham	Chief George Baker	(508) 375-6618
Easthampton	Lt. Mike Spanknebel	(413) 584-0883
Easton	Thomas Stone	(508)230-0750
Egremont	Doreen Hutchinson	(413) 528-0790 x3031
Erving	John Taylor	(413) 774-3167
Essex	Dep. Chief James Coughlin	(978) 531-3447
Everett	Captain Richard Tustin	(781) 729-1802
Fall River	Richard Aquiar	(508) 324-2733
Falmouth	Chief Paul D. Brodeur	(508) 495-2517
Florida	John Morocco	(413) 662-3102
Foxborough	Gerald McNamara Sr.	(508) 543-1230
Franklin	Chief Gary McCarraher	(508) 528-2323
Gardner	James Wright	(978) 249-8275
Georgetown	Chief Albert B. Beardsley	(978) 352-5757
Gloucester	Dep. Chief James Coughlin	(978) 531-3447

MUNICIPALITY	CHAIRPERSON	PHONE NUMBER
Goshen	Lt. Mike Spanknebel	(413) 584-0883
Grafton	Katharine Cederberg	(508) 826-0740
Granby	Lt. Mike Spanknebel	(413) 584-0883
Great Barrington	Doreen Hutchinson	(413) 528-0790 x3031
Groton	William Shute	(978) 804-2084
Groveland	Jeff Coco/James Michitson	(978) 682-5212
Halifax	Chief David Rich	(781) 585-2633
Hamilton	Jeff Coco/James Michitson	(978) 682-5212
Hampden	Doug Mellis	(413) 566-8011
Hancock	Chief Robert Czerwinski	(413) 448-9764
Hanover	James Purcell	(781) 826-3001
Hanson	Allen Hoyte	(781) 293-9571
Hardwick	James Wright	(978) 249-8275
Harwich	Chief George Baker	(508) 375-6618
Harvard	William Shute	(978) 804-2084
Haverhill	Jeff Coco/James Michitson	(978) 682-5212
Hawley	John Taylor	(413) 774-3167
Heath	John Taylor	(413) 774-3167
Hingham	Chief Mark J. Duff	(781) 741-1480
Holbrook	James Reichert	(781) 767-4312
Holland	James Gagne	(413) 245-9733
Hopedale	Chief Tom Daige	(508) 473-1050
Hubbardston	James Wright	(978) 249-8275
Hull	Chief Jane Walsh	(781) 925-8111
Ipswich	Jeff Coco/James Michitson	(978) 682-5212
Lancaster	Chief John T. Fleck	(978) 365-3502
Lawrence	Jeff Coco/James Michitson	(978) 682-5212
Leicester	Robert Wilson	(508) 892-7022
Lenox	Chief Robert Czerwinski	(413) 448-9764
Leominster	Charles Coggins	(978) 534-7580
Lexington	Chief William Middlemiss	(781) 862-0272
Lincoln	Chief Kenneth MacLean	(978) 443-2239
Littleton	William Shute	(978) 804-2084
Lowell	Mark Boldrighini	(978) 459-5552
Lynn	Dep. Chief James Coughlin	(978) 531-3447
Lynnfield	Paul Romano	(617) 334-3132
Malden	Captain Richard Tustin	(781) 729-1802
Manchester by the Sea	Dep. Chief James Coughlin	(978) 531-3447

MUNICIPALITY	CHAIRPERSON	PHONE NUMBER
Marblehead	Dep. Chief James Coughlin	(978) 531-3447
Marlborough	Donald P. Cusson	(508) 481-1933
Mashpee	Chief George Baker	(508) 375-6618
Medford	Captain Richard Tustin	(781) 729-1802
Melrose	Captain Richard Tustin	(781) 729-1802
Mendon	Chief John Touhey	(508) 473-5330
Merrimac	Chief James Broderick	(978) 388-8185
Methuen	Jeff Coco/James Michitson	(978) 682-5212
Middleton	Jeff Coco/James Michitson	(978) 682-5212
Milford	Chief John Touhey	(508) 473-1214
Millbury	Robert Beausoleil	(508) 865-6957
Millville	Chief John Mullaly	(508) 883-4740
Milton	Mark Williams	(617) 821-1659
Monroe	John Taylor	(413) 774-3167
Monson	Jeremy Bedson	(413) 267-4128
Monterey	Doreen Hutchinson	(413) 528-0790 x3031
Mount Washington	Doreen Hutchinson	(413) 528-0790 x3031
Nahant	Dep. Chief James Coughlin	(978) 531-3447
Nantucket	Chief George Baker	(508) 375-6618
New Braintree	James Wright	(978) 249-8275
New Salem	John Taylor	(413) 774-3167
New Marlborough	Doreen Hutchinson	(413) 528-0790 x3031
Newbury	Chief James Broderick	(978) 388-8185
Newburyport	Chief Steven Cutter	(978) 465-4427
Newton	Chief Joseph LaCroix	(617) 796-2201
North Adams	John Morocco	(413) 662-3102
North Andover	Jeff Coco/James Michitson	(978) 682-5212
North Attleboro	Chief Peter Lamb	(508) 699-0140
North Brookfield	Douglas Blood	(508) 867-0206
North Reading	Captain Richard Tustin	(781) 729-1802
Northampton	Lt. Mike Spanknebel	(413) 584-0883
Northborough	Chief David Durgin/Brad Newman	(508) 393-1537
Northbridge	Chief Gary Nestor	(508) 234-8448
Norton	Chief Richard Gomes	(508) 285-0240
Norwell	Chief Paul Rosebach	(781) 659-8158
Norwood	Dan Matthews	(781) 461-6159
Oakham	James Wright	(978) 249-8275
Orange	John Taylor	(413) 774-3167

MUNICIPALITY	CHAIRPERSON	PHONE NUMBER
Orleans	Chief George Baker	(508) 375-6618
Oxford	Jeff Wilson	(508) 987-6009
Palmer	Chief Alan J. Roy	(413) 283-3861
Peabody	Dep. Chief James Coughlin	(978) 531-3447
Pembroke	Jim Neenan	(781) 293-5414
Pepperell	William Shute	(978) 804-2084
Petersham	James Wright	(978) 249-8275
Phillipston	James Wright	(978) 249-8275
Plainville	Chief Merrick	(508) 695-7115
Quincy	Tom Gorman	(617) 376-1105
Randolph	Chief Charles D. Foley, Jr.	(781) 961-0992
Reading	Captain Richard Tustin	(781) 729-1802
Rehoboth	William Maiorano	(508) 252-6415
Revere	Captain Richard Tustin	(781) 729-1802
Rockland	Robert Bowles	(781) 878-5025
Rockport	Dep. Chief James Coughlin	(978) 531-3447
Rowe	John Taylor	(413) 774-3167
Rowley	Chief James Broderick	(978) 388-8185
Royalston	James Wright	(978) 249-8275
Rutland	James Wright	(978) 249-8275
Salem	Dep. Chief James Coughlin	(978) 531-3447
Salisbury	Chief James Broderick	(978) 388-8185
Sandwich	Chief George Baker	(508) 375-6618
Saugus	Captain Richard Tustin	(781) 729-1802
Scituate	Chief Edward Hurley	(781) 545-8748
Seekonk	Allan Jack	(508) 336-8510
Sheffield	Doreen Hutchinson	(413) 528-0790 x3031
Shrewsbury	Don Filiere	(508) 841-8422
Shirley	William Shute	(978) 804-2084
Shutesbury	John Taylor	(413) 774-3167
Somerset	Chief Steven J. Rivard	(508) 646-2810
Sterling	Bruce Baker	(978) 422-6253
Southborough	Neal Aspesi	(508) 485-3235
Southbridge	John Hart	(508) 765-9771
Spencer	Robert Parsons	(508) 885-3555
Stockbridge	Arthur Dutil	(413) 298-3691
Stoneham	Captain Richard Tustin	(781) 729-1802
Stoughton	David Jarden and Doug Campbell	(781) 344-3132

MUNICIPALITY	CHAIRPERSON	PHONE NUMBER
Sturbridge	Chief Thomas Ford	(508) 347-2500
Sudbury	Chief Kenneth MacLean	(978) 443-2239
Sutton	Paul Maynard	(508) 865-8737
Swampscott	Dep. Chief James Coughlin	(978) 531-3447
Swansea	Chief Peter J. Burke	(508) 672-4305
Templeton	James Wright	(978) 249-8275
Tewksbury	Mark Boldrighini	(978) 459-5552
Topsfield	Charles Denault	(978) 887-5148
Tyngsboro	Wes Russell	(978) 649-7504
Upton	Chief Michael J.. Bradford, Sr.	(508) 529-3421
Uxbridge	Sgt. Peter Emerick	(508) 278-7755
Wakefield	Captain Richard Tustin	(781) 729-1802
Wales	Hank DeCoteau	(413) 245-7571
Waltham	Lt. Randy Mullin	(617) 421-0280
Ware	Lt. Mike Spanknebel	(413) 584-0883
Wareham	Chief Robert McDuffy	(508) 295-2973
Warren	Joe Laflower	(413) 436-9595
Warwick	John Taylor	(413) 774-3167
Watertown	Chief William Middlemiss	(781) 862-0272
Wayland	Chief Kenneth MacLean	(978) 443-2239
Webster	Chris Jolda	(508) 949-3840
Wellesley	Chief Kevin Rooney	(781) 235-1300
Wendell	John Taylor	(413) 774-3167
Wenham	Chief Robert A. Blanchard	(978) 468-5508
West Boylston	Bruce Baker	(978) 422-6253
West Bridgewater	Leonard T. Hunt	(508) 586-3232
West Brookfield	Bryce Lesily	(508) 867-1405
West Newbury	Chief James Broderick	(978) 388-8185
West Stockbridge	Doreen Hutchinson	(413) 528-0790 x3031
Westborough	Lt. Robert Rand	(508) 366-3040
Westford	William Shute	(978) 804-2084
Weston	Chief Kenneth MacLean	(978) 443-2239
Westminster	Brenton MacAloney	(978) 874-2313
Westport	Charlene Wood	(508) 636-1110
Weymouth	John Mulveyhill	(781) 340-5048
Whitman	Robert Schmidt	(781) 447-7677
Wilmington	Mark Boldrighini	(978) 459-5552
Winchendon	James Wright	(978) 249-8275

MUNICIPALITY	CHAIRPERSON	PHONE NUMBER
Winchester	Captain Richard Tustin	(781) 729-1802
Winthrop	Captain Richard Tustin	(781) 729-1802
Wilbraham	Nick Yarmac	(413) 596-3122
Williamsburg	Lt. Mike Spanknebel	(413) 584-0883
Williamstown	Chief Robert Czerwinski	(413) 448-9764
Winchendon	Captain Richard Tustin	(781) 729-1802
Woburn	Captain Richard Tustin	(781) 729-1802
Worcester	Thomas Gingras	(508) 799-1840
Wrentham	Joseph Heck	(508) 384-5400
Yarmouth	Chief George Baker	(508) 375-6618

During non-business hours, or if a LEPC member cannot be reached, inform the local fire department.

COMPANY CONTACTS

IMPORTANT: On-call Environmental Engineers switch on-call every other week for nights/weekends; therefore, please obtain assistance from Environmental Engineer through the Electric or Gas Dispatch.

Environmental Engineers/Scientists

New England North Division

Beverly Auxford-Paiva (Bay State North)
508.922.6309 (mobile)
781.388.5244 (office)

Joanne Lupa (Bay State West)
508.328.5635 (mobile)
508.860.6484 (office)

New England South Division

Deborah Blanch (Bay State South)
617.908.8881 (mobile)
508.897.5520 (office)

William Howard (Ocean State)
401.255.2888 (mobile)
401.784.7490 (office)

Environmental Manager

Peter Harley
401.255.5195 (mobile)
781-907-3701 (office)

Gas Dispatch: 877-304-1203
Central Electric Dispatch: 877-247-3608
MV & Granite Electric Dispatch: 877-247-3607
North Shore Electric Dispatch: 877-247-3606
Southeast Electric Dispatch: 866-411-3812
South Shore Electric Dispatch: 866-411-5599
Western Electric Dispatch: 877-247-3609

ENVIRONMENTAL CONSULTANT AND CLEAN UP CONTRACTOR CONTACTS

CLEAN HARBORS **800.645.8265**
(Clean up Contractor) (1-800 OIL TANK)

CONECO ENGINEERS AND SCIENTISTS **508.312.0090**
(Environmental Consultant)
After using pager number above, wait for call back. If page not returned within 10 to 15 minutes, try the mobile phone numbers, below:

Brian Klingler - **508.962.6277** (mobile)
John Aevazelis - **508.962.7423** (mobile)

TIGHE & BOND
(Environmental Consultant)
For Spills in Central MA area, contact Ken Gendron at **508.479.2924** (mobile)
For Spills in Western MA area, contact ER Pager at **413.263.0957**

ENVIRONMENTAL SPILL RESPONSE PROCEDURES

In the immediate moments following any spill event, the procedures outlined in the EG-501 series must be followed. As described in EG-501, it is the responsibility of the Environmental Scientist/Engineer to assume responsibility for directing the cleanup. In addition to those actions outlined in the applicable section of the EG-501 series, the Environmental Scientist/Engineer should consult EP-5 for more specific guidance.

Record of Change		
Date of Review/Revision:		
Revision	**Date**	**Description**
0	04/01/06	New EG for MA.
1	06/01/09	Updated to reflect changes in assignments of Environmental Engineers and telephone information for spill notifications. Also, combined three previous EG's (EG-502MA-BSN, EG-502MA-BSS, & EG-502MA-BSW).
2	12/28/09	Updated Environmental Engineer contact information.
3	09/30/10	Update contacts and phone numbers.
4	01/04/2012	Updates due to organizational changes
5	05/03/13	Updated to reflect current roles and responsibilities of personnel involved in spill response and procedures relative to the content of EG-501MA, updated section on Environmental Spill Response Procedures.

Appendix F

Hydrostatic Test Procedure

Best Management Practices Plan
Remediation General Permit # MAG910000
Hydrostatic Testing

Prepared By:

This Best Management Practices Plan has been prepared in compliance with Part I Section E, of the Final Remediation General Permit under the National Pollutant Discharge Elimination System for Discharges in Massachusetts.

NG is conducting a required hydrostatic pressure test on of its new 12 inch natural gas pipeline and will be discharging a total of over 500,000 gallons of test water for the entire Project at successful completion of the test.

NG has contracted with TBD to perform the hydrostatic testing, Con-Test Analytical Laboratories to perform required water quality testing, and Clean Harbors, Inc, (CHI) , to perform necessary filtration of the discharge water.

A. Compliance with General Permit Terms

Sampling

- NG has contracted with Con-Test Analytical Laboratory (CAL) to provide trained personnel to obtain the necessary samples and perform analysis as required by the General Permit.

- For influent sampling, one sample within the first 10% of the fill and one sample within the last 10% of the fill will be taken. NG will coordinate with CAL personnel to determine time of last fill sample.

- For in-process sampling, two samples will be taken of the depressurized pipeline and no discharge will occur until sample results indicate the water quality is consistent with discharge limits. NG intends to filter the discharge through filter media at a maximum discharge rate of XXGPM.

- For effluent sampling, one sample within the first 10% of the discharge and one sample within the last 10% of the discharge will be taken downstream of filtration. The EI will coordinate with Clean Harbors and CAL to determine time of last discharge sample.

Maximum Discharge Flow- TBD

NG has permitted a maximum discharge flow of XXX GPM, however, mobile filter capacity is limited to XXXGPM which will allow maximum dilution factor for metals.

The selected contractor will push of the water out of the pipeline and into a frac tank. CHI will connect to the other side of the tank with suction hoses and then to one 6" transfer pump. After the pump, the water will flow into multi stage bag filter housings with 50 micron filter socks. The housings are plumbed to allow for bags to be replaced without stopping the flow. After the bag filters, the water will pass through

two 8' diameter carbon vessels that will be filled with 18,000 pounds of activated carbon. After the second carbon vessel the water will pass through a digital flow meter and then the effluent 6" line that will be attached to the customer discharge pipe.

Erosion, Scouring and Sediment Control

- NG has installed silt fence surrounding the active site.
- NG will seed and hay mulch disturbed areas upon completion of the project.
- A welded splash plate will be secured to the end of the discharge pipe.
- Discharge will be actively monitored to prevent erosion.

Management of Run-on and Runoff

- Entire site is surrounded by dug in silt fence. No potential for run-on or run-off.

Site Security

- Access to the work site is via a locked gate. Equipment is secured at the end of each work date. No further site security measures are contemplated for this short duration project.

Pollution Prevention

- No hazardous materials is expected to be utilized for this project, and stored on site.
- Contractors shall have copies of all MSDS of each chemical to be used during the job and they shall be available for review on site.
- Contractors shall provide emergency contact lists for key personnel.
- No fuel storage, or refueling within 100 feet of a Wetland.
- Contractors and NG shall inspect equipment for integrity, including, but not limited to, valves, hoses and fittings.
- Contractors, and NG shall monitor all refueling, and all if leakage should occur, then refueling will cease until leak repaired and or containment pan placed under leaking connection.
- Contractors shall provide immediate notification to NG on-site representative in the event of any spill.
- Contractors, and NG will provide immediate cleanup response for any spills.
- Contractors, and NG will have adequate hydrocarbon spill response materials on hand at the work site.

Maintenance of Filtering Equipment

- CHI treatment equipment is cleaned between water treatment projects. Tanks, hoses, fittings, sight glass, and flow meters are inspected for contamination and corrosion. Any component not leak and contamination free is removed from the treatment system. Flow meters are calibrated annually by the manufacturer.
- CHI carbon used for water treatment is purchased from a reliable supplier of quality reactivated carbon. Diesel powered water pumps and vacuum extraction system are maintained according to the manufacturers recommendations. Coolant, engine oil and filters are all serviced on regular intervals.

Management of Generated Wastes

The spent media is expected to be non-hazardous. However , testing will be completed to determine proper disposal

B. Compliance with Hydrostatic Testing BMPs

Pipeline cleaning

- Prior to filling the pipeline with water, NG will run multiple cleaning pigs within the pipeline.

Discharge Flow

- Discharge rate will be limited to a maximum of TBD gpm

Chemical Additives

- No chemical additives are proposed for this test project.

De-watering Structures

- Will comply with the guidance provided in EP 3, Natural Resources Protection.

C. Employee Training

- All contractor and NG personnel to have a site safety briefing prior to working on project.
- All contractor and NG personnel to review this Best Management Practices Plan prior to performing hydrostatic test.
- Copy of this Best Management Practices Plan to be available on site.

Appendix G

Copies of Permits/Approvals (to be completed)

Appendix H

Amendments to the ECP (if applicable)