Chapter 6

Existing Wastewater Infrastructure

CHAPTER 6

EXISTING WASTEWATER INFRASTRUCTURE

6.1 INTRODUCTION

The purpose of this chapter is to review the existing wastewater infrastructure in the PPA. This includes both on-site septic systems and small wastewater treatment plants. The analysis of this infrastructure provides a basis for estimating the nitrogen load resulting from wastewater disposal and developing management plans in the future.

6.2 EXISTING ON-SITE SYSTEMS

A. **Description of systems.** Approximately one quarter of homes in the United States use septic systems for disposal of wastewater. Because there is no municipal wastewater treatment facility in the PPA, the majority of the properties are served by on-site disposal systems, primarily septic systems (nearly 2,000 dwellings/homes are served by small package treatment plants, which will be discussed in a later section of this chapter). Several documents exist that provide useful, easily understood information regarding general operation and maintenance of septic systems. Among these are Cape Cod Homeowners' Guide to Title 5 (1999, Association for the Preservation of Cape Cod, Inc.) and A Homeowner's Guide to Septic Systems (2002, USEPA).

The following describes the most common types of systems used for onsite disposal. The most frequently used in the PPA are the Title 5 systems and Innovative/Alternative (I/A) systems.

1. **Title 5 Systems** are septic systems designed under 310 CMR 15.000 commonly referred to as the Title 5 regulations, as identified in Chapter 3. They are composed of three

main elements: septic tank, distribution box, and soil absorption system. Septic tanks remove floatable and settleable solids from the waste stream, and can act as an anaerobic digester to digest (remove) solids or as a flow equalization tank. The tank is usually constructed of concrete and consists of baffled chambers, or it has inlet and outlet tees designed to isolate the solids in the tank and eliminate short-circuiting of floatable materials (scum, oil, grease, and other buoyant waste materials). The distribution box receives the effluent from the septic tank and distributes it evenly throughout the leaching system. The distribution box is typically a small watertight concrete structure with one inlet and several outlets. The soil absorption system is used to infiltrate the septic tank effluent into the ground. Soil absorption systems come in many forms including leaching trenches, leaching pits, leaching galleries, and leaching fields. The selection of a particular type of soil absorption system for a particular design will depend upon the specific site considerations and costs.

The system is very effective at removing settleable solids and getting the effluent into the ground; however very limited treatment is provided by this system.

2. **Cesspools** are tanks with open joints or holes in the walls and bottom through which the wastewater percolates into the ground. Solids collect in the bottom of the tank where they decompose or can be removed as septage. They are considered a substandard septic system, and often require replacement at the time of property transfers.

3. **Advanced Septic Systems** are systems that use advanced technology to provide a higher level of treatment than regular Title 5 systems. Advanced septic systems are commonly referred to by the Massachusetts Department of Environmental Protection (MADEP) as I/A systems. The Title 5 regulations allow a variance for smaller soil absorption systems (leaching area) to be constructed when I/A systems are used. These systems can be used to reduce the Biochemical Oxygen Demand (BOD) and nitrogen in the septic tank effluent. There are over 200 I/A systems in Mashpee alone, including Amphidrome, Bioclere, FAST, Waterloo Biofilters, RUCK, Recirculating Sand Filters, SeptiTech, Singulair, and Nitrex systems. In addition, there

are two composting toilet systems. These I/A systems often have more monitoring requirements than a regular Title 5 system. I/A systems are usually requested and approved when a property owner has minimal space for a soil absorption system, when the property is located in a MADEP-specified nitrogen sensitive area, or as required by the Board of Health, Conservation Commission, Planning Board, or Cape Cod Commission.

4. **Tight Tanks** are non-discharge systems that collect and store the wastewater until it can be removed. All the wastewater goes directly into the tight tank. The tank has a level indicator with an alarm, and a signal is transmitted when the liquid level reaches a certain height. When the tank is full, a septage hauler empties the tank and transports the contents to a treatment facility. Tight tanks are usually approved by MADEP only as an interim measure to meet a health risk. There is currently only one known tight tank in Mashpee, and it is used for industrial, non-hazardous purposes. There are no tight tanks that are used for sanitary waste.

5. **Communal Systems** are often Title 5 systems that treat and dispose wastewater from more than one property. They can use common septic tanks, as well as common soil absorption systems. Communal systems with flows greater than 10,000 gallons per day (gpd) are required to obtain a groundwater discharge permit, and they are then required to treat wastewater to a high enough degree to meet Class I groundwater standards. Any increases resulting in design flows greater than 10,000 gpd or changing the design flow of a system already designed for 10,000 gpd require variances.

Campgrounds are permitted to have design flows in excess of 10,000 gpd provided that the facility only receives temporary use; each system is Title 5-compliant; no single system is designed for more than 10,000 gpd; the campground does not receive sewage from mobile home tight tanks that have been chemically treated; and the systems are inspected and maintained so as to protect public health and safety and the environment.

When separate facilities are combined after construction is complete and the resultant flow is

more than 10,000 gpd, an inspection of all the systems must be performed within one year of the change. In no way can ownership of facilities be split up for the purpose of circumventing Title 5 requirements. MADEP may take "any action necessary to protect public health, safety, welfare, or the environment" if it is determined that steps were taken to circumvent requirements.

6.3 EXISTING WASTEWATER TREATMENT FACILITIES

A. Introduction

The purpose of this section is to discuss the performance, capacity, and expandability for all of the existing package wastewater treatment facilities (WWTFs) in the PPA. There are currently eight (8) package WWTFs in the Town of Mashpee, located at Mashpee Commons, Mashpee High School, New Seabury, Willowbend, South Cape Village, Southport, Stratford Ponds, and Windchime Point, and one at the Forestdale School in Sandwich.

It should be noted that a permit for construction has been granted for a proposed Chapter 40B development in the Town of Barnstable, on the Mashpee town line. This development will include 124 single-family homes on 50.44 acres of land. It was permitted under the name Scrimshaw Village, but has been renamed Cotuit Meadows. The development, with an anticipated daily wastewater flow of 40,920 gpd, will include a WWTF designed to treat the wastewater to below 5 parts per million (ppm) of nitrogen. The effluent will be disposed of in the Popponesset Bay watershed. However, as construction is still in progress, it is simply noted for consideration as the Watershed Nitrogen Management Plan (WNMP) moves forward.

B. General Process Description

Several system components are common to all small wastewater treatment facilities. These components are required by MADEP's design guidelines or are required as part of a well-equipped treatment facility that can be easily operated and maintained during its design life. The

main components of a small wastewater treatment facility are presented in Figure 6-1 and described below.

1. **Pretreatment / Preliminary Treatment.** Usually, for package WWTFs, pretreatment is accomplished as part of the primary treatment process. Pretreatment involves the removal of screenings, grit, large objects, grease, and floatables, which can damage pumping systems and other unit processes. The small wastewater treatment facilities in the PPA typically do not have a dedicated pretreatment system.

2. **Primary Treatment.** Primary treatment usually occurs in settling tanks, but large septic tanks or primary clarifiers are also used. The settling tanks help reduce the organic loading to the biological nitrogen removal process by removing the settleable solids and the floatables. The raw wastewater flows through the clarifier or septic tank and the solids settle to the bottom, where they are collected and removed for disposal. MADEP's design guidelines require the installation of primary clarifiers on all small wastewater treatment facilities, though they are not generally used with Sequencing Batch Reactor (SBR) processes.

3. **Flow Equalization.** Flow equalization is required to equalize the daily variations of wastewater flows and associated loadings that are conveyed to a small wastewater treatment facility. A flow equalization tank stores the variable flows that occur periodically during the day, and equalization pumps convey a relatively constant flow from the equalization tank to the biological treatment process.

4. **Secondary Treatment / Nutrient Removal.** This process utilizes a large concentrated population of microorganisms to treat the wastewater. The microorganisms are mixed with (or brought into contact with) the wastewater in an aerobic environment, and biodegradable waste is metabolized by the microorganisms to new cell mass and carbon dioxide. This first step is commonly referred to as BOD removal. The second step is nitrification, during which ammonia in the wastewater is converted to nitrate-nitrogen under aerobic conditions.

These two steps are both aerobic and generally occur at the same time. When nitrogen removal is incorporated with biological treatment, a third step is required, where the amount of oxygen entering the process is limited and the microorganism environment becomes anoxic. The anoxic environment causes the microorganisms to obtain oxygen by converting the nitrate-nitrogen to nitrogen gas, which removes the nitrogen from the wastewater and releases it into the atmosphere. A carbon source such as methanol is commonly added to the process to support the conversion of nitrate-nitrogen to nitrogen gas. This third step is called "denitrification".

The biological nitrogen removal process is usually either a suspended growth process, where a concentrated microorganism population is suspended in the wastewater, or a fixed-film process, in which the microorganisms adhere to a supporting media, and the wastewater is cycled through.

5. **Secondary Clarifiers.** Secondary clarifiers are an integral component of the activated sludge and Rotating Biological Contactor (RBC) nitrogen removal processes, but are not typically required for SBR or Amphidrome systems. These clarifiers are used to separate the biological solids (sludge) from the treated wastewater, and they operate similarly to the previously described primary clarifiers.

6. **Disinfection.** Disinfection may be required prior to discharging the treated effluent to the groundwater. For the small facilities in Mashpee, disinfection is usually accomplished by exposing the effluent to ultraviolet light, which inactivates (essentially kills) the bacteria in the effluent.

7. **Effluent Disposal Facilities.** These facilities are required to discharge and distribute the treated effluent to the ground. The two most common methods used in Mashpee are sand infiltration beds and subsurface leaching. There are a number of effluent technologies that are available and these will be discussed in the next phase of the project. When sand infiltration beds are used, the effluent is piped to a sand bed, where the effluent percolates into

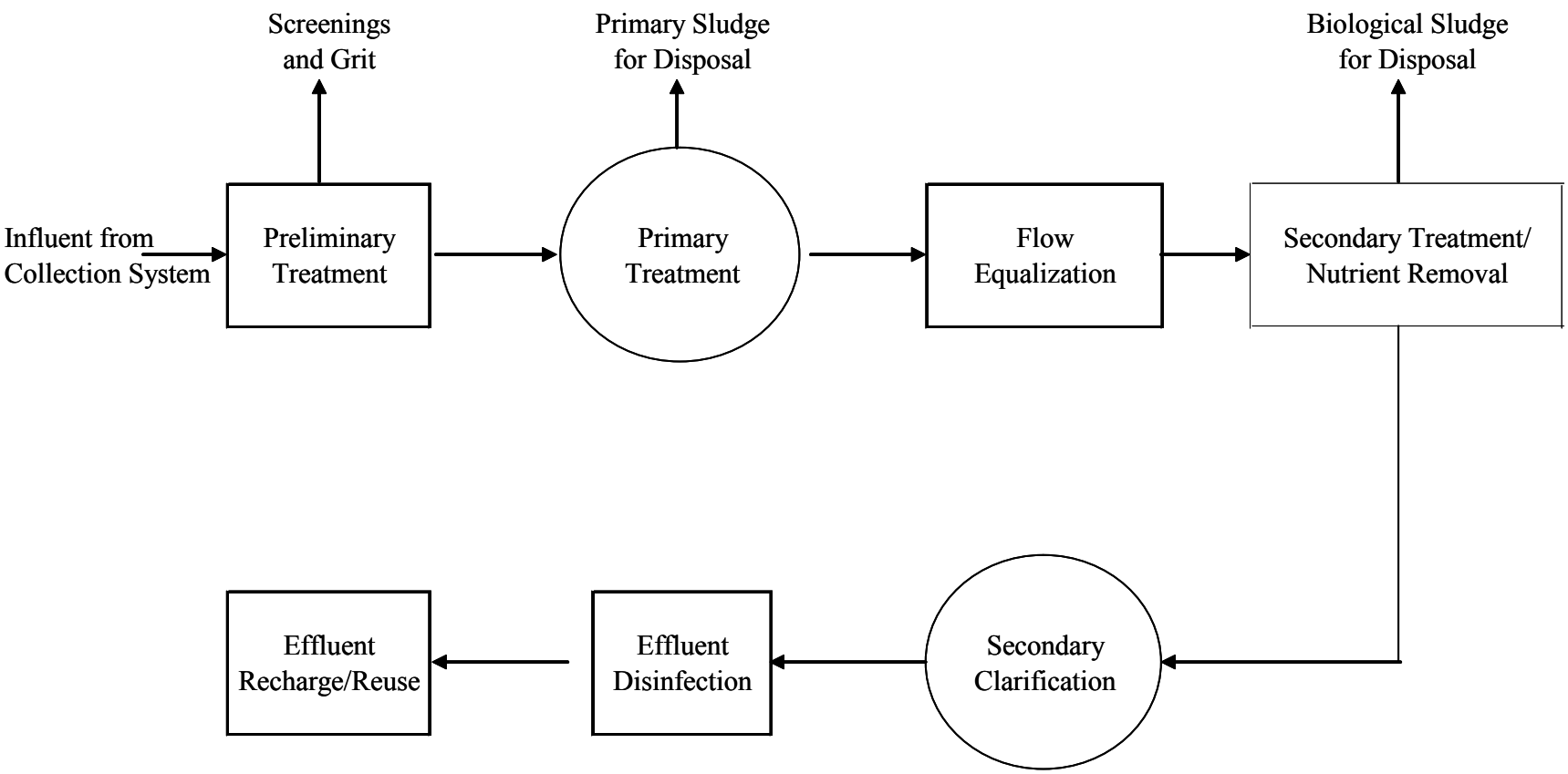

Stearns & Wheler, LLC
Environmental Engineers and Scientists
HYANNIS, MASSACHUSETTS
phone: (508) 362-8890
web: www.stearnswheler.com

Date: 04/2007 Project No. 00074

TOWN OF MASHPEE, MASSACHUSETTS

Watershed Nitrogen Management Plan

Componets of Small WWTF Flow Schematic

FIGURE 6-1

Data Source: Mass GIS
File Location: J:\GIS\GIS Project Folder\Job#\00074 Mashpee\2006 WWFP\Report Figures\00074F6-12 wwtf.mxd

the ground through the open sand surface. When subsurface leaching systems are used, the effluent is piped to one of three types of distribution systems, namely fields, trenches, or chambers, where the effluent percolates into the ground.

C. Existing Wastewater Treatment Facilities

In this section, the eight existing small wastewater treatment facilities are discussed, with reference to the general processes discussed above.

1. Mashpee Commons Wastewater Treatment Facility

Identification and History. The WWTF serving Mashpee Commons and the surrounding areas is located off of Great Neck Road, south of the Mashpee rotary. The facility was originally constructed in 1986 and upgraded in 1995. Currently the WWTF services a variety of land uses at Mashpee Commons, including retail, theater, restaurant, office, residential, and governmental uses. The WWTF also collects wastewater from Phase I of the nearby North Market Street development, which includes a Stop & Shop grocery store, a bank, a liquor store, a video rental, and other small retailers. The Mashpee Commons WWTF is in the Mashpee River subwatershed of Popponesset Bay.

Based on future growth and development plans in the area, another upgrade to the facility is proposed in the Mashpee Commons Master Plan. This proposed facility upgrade is likely going to change the process from an RBC to a Membrane Bio-Reactor (MBR). As of December 2006, the upgrade is still several years away from implementation. The following Mashpee Commons Neighborhoods are proposed to be served by the upgraded WWTF: Whitings Road, East Steeple Street, Jobs Fishing Road, North Market Street (Phase II), Great Neck Road South, and Trout Pond. These neighborhoods are not yet built and may still be 10 to 20 years away from buildout conditions.

The police department, the fire department, and the Senior Citizen's Center have been connected to the Mashpee Commons WWTF. The Mashpee Commons WWTF is also proposed to collect wastewater from the following sites in the Town of Mashpee by the year 2015:

- Elementary and Middle Schools
- Homeyer Village
- Existing and Proposed Town Libraries
- Christ the King Church
- Boys & Girls Club

Process Description. The WWTF at Mashpee Commons is comprised of the following main components: primary settling tanks, flow equalization tank, RBCs for secondary treatment, secondary clarifiers, denitrification filters, UV disinfection, and an effluent disposal facility. Figure 6-2 outlines this process.

Currently, sewage is received from a pumping station located near Steeple Street and distributed to three (3) 23,000-gallon primary settling tanks, where it is combined with returned sludge for primary treatment. These tanks are pumped twice yearly to remove sludge that is later processed off-site. The primary effluent is then pumped through a 30,000-gallon flow equalization tank and into the two (2) aerobic RBC treatment trains. Each RBC unit is 12 feet in diameter by 26 feet long, and provides a site for nutrient uptake by microorganisms. The rotating shaft brings the microorganisms in contact with both the organic matter in the wastewater and the oxygen in the atmosphere and keeps the system mixed. Alum is added at this point as a source of alkalinity to keep the pH of the system at the desired level.

Part of the RBC effluent is recycled back to the primary settling tanks, while part continues on to secondary clarification. There are two (2) secondary clarifiers; each is 12 feet in diameter by 8 feet high, and is used to remove floatable and settleable solids from the wastewater. Methanol is added here to provide an additional carbon source, which will be used in the denitrification

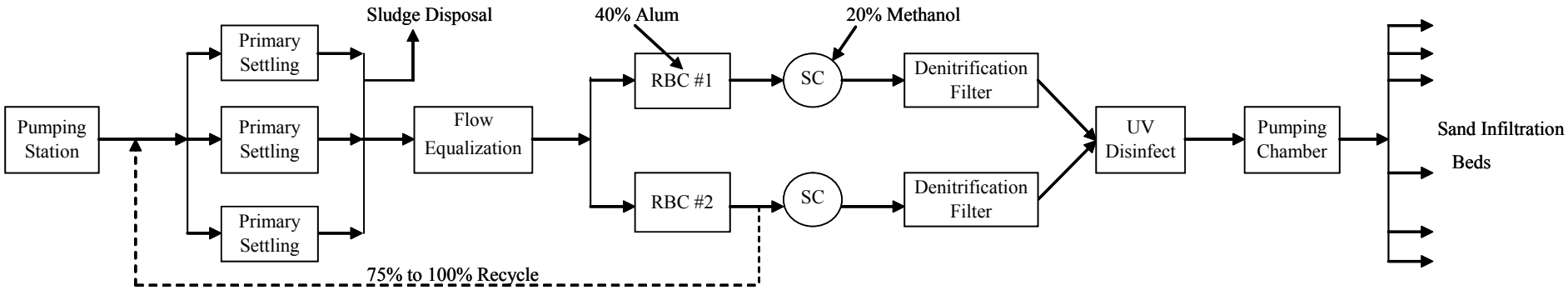

Legend: SC = Secondary Clarifier

RBC = Rotating Biological Contactor

UV Disinfect = Ultraviolet Disinfection

Data Source: Mass GIS
File Location: J:\GIS\GIS Project Folder\Job#\
00074 Mashpee\2006 WWFP\Report Figures\
00074F6-12 mc.mxd

Stearns & Wheler, LLC
Environmental Engineers and Scientists
HYANNIS, MASSACHUSETTS
phone: (508) 362-6890
web: www.stearnswheler.com

Date: 3/2007 Project No. 00074

TOWN OF MASHPEE, MASSACHUSETTS

Watershed Nitrogen Management Plan

Mashpee Commons
Flow Schematic

FIGURE 6-2

process. (For a time, methanol was replaced by MicroC as the supplemental carbon source; however, the wastewater treatment system performance suffered. The operator identified that using MicroC in a system with high dissolved oxygen levels created a much higher chemical demand and sludge generation without the performance seen with using methanol. The operators have since reverted back to methanol use.) After leaving the secondary clarifier, the clarified effluent in each train passes through a 20 ft^2 denitrifying filter that anaerobically removes nitrate and also filters out any remaining suspended solids. After flowing through this filter, the effluent from the two treatment trains is recombined to undergo ultraviolet (UV) disinfection before being sent to a 15,000-gallon effluent pumping chamber. The final effluent is pumped from the effluent pumping chamber to four sand infiltration beds that provide a total leaching area of 8,100 ft^2.

The WWTF at Mashpee Commons currently has both treatment trains in operation.

Flow Capacity. The facility currently operates under Discharge Permit No. 306, with a permitted flow of 180,000 gpd, although the facility is currently seeing an average annual flow of 22,000 gpd – only 12% of its capacity. The current peak day flow is less than 43,000 gpd, which is only 24% of the plant's capacity. However, according to the plant operator, the denitrification filters are currently operating close to capacity. The proposed upgrade to the plant is anticipated to treat a peak flow of 180,000 gpd and achieve an average of 4 mg/L Total Nitrogen, which is below the limit of the discharge permit. In addition, the ultimate effluent disposal capacity of the sand infiltration beds (based on soil permeability) is estimated at 300,000 gpd.

Estimates of the Mashpee Commons build-out average annual flows were made using build-out information provided by the Mashpee Planning Department and the estimating methods described in more detail in Chapter 7. According to these estimates, the future average annual flow to Mashpee Commons will be nearly 120,000 gpd. The following table summarizes the existing peaking factors (relationship between average annual flow and peak flows) and how the

peaking factors affect the estimated future flow.

TABLE 6-1

MASHPEE COMMONS PEAKING FACTORS

	Maximum Month	**Peak Day**
Peaking Factor	1.5	2.0
Estimated Future Flow (gpd)	170,000	230,000
Note: Peaking factors are based on flow data from October 2004 – October 2005 and are the ratio of maximum month or peak flow to average annual flow.		

As shown in Table 6-1, the estimated maximum month flow will be within the permit limits, but the estimated build-out peak day flow may exceed the permit and the design flow. The Mashpee Commons WWTF is not anticipated to have available flow capacity at buildout conditions. If additional flow capacity were to be added at the Mashpee Commons WWTF, the existing building would require expansion. The area surrounding the WWTF is mostly wooded, with an electric utility easement on one side of the property. However, it is likely that there is room on the site for expansion. Additional capacity may also be designed into the new system in the future. Additionally, the sand infiltration beds have existing capacity for 300,000 gpd of effluent discharge and would therefore be able to handle additional flows. The biggest concern would be the operator's identification that the existing denitrification filters may be approaching capacity and therefore the facility may require an upgrade to address this issue as additional flow is added to the system.

Performance. The following table summarizes the discharge permit limits, and the average annual influent and effluent concentrations (October 2004-October 2005 data) for the various wastewater characteristics analyzed.

TABLE 6-2

MASHPEE COMMONS TREATMENT PERFORMANCE

Wastewater Characteristic	Permit Limit (mg/L)	Average Annual Influent (mg/L)	Average Annual Effluent (mg/L)	Percent Removal
BOD	30	457.7	14.2	97%
TSS	30	200.8	14.0	93%
Total N	10	52.4	6.3	88%
Nitrate-N	10	0.1	2.4	-
Oils & Grease	15	95.8	0	100%

On an average annual basis, the facility was in compliance with all the discharge permit limits listed above. In addition, the percent removals for BOD, Total Suspended Solids (TSS), and Oil & Grease were very high. On a monthly basis, however, BOD limits were exceeded on two occasions (May and June 2005).

The following figure shows the monthly effluent Nitrogen values for the analysis period.

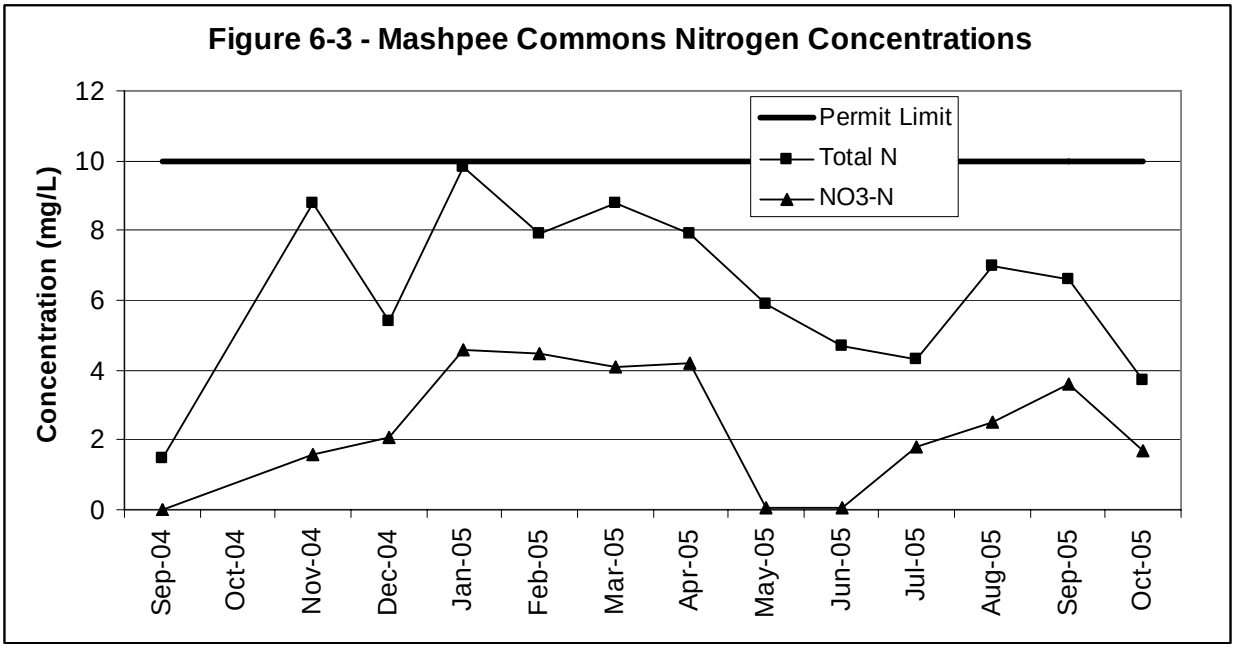

As is shown in Figure 6-3, there were no exceedances of Total Nitrogen during the analysis period.

2. New Seabury Wastewater Treatment Facility

Identification and History. The WWTF at New Seabury was constructed in 2000 to centralize the wastewater collection, treatment, and disposal of various existing and proposed properties owned by New Seabury Properties, LLC. New Seabury is located on the 2,700-acre Great Neck peninsula, bounded by Waquoit Bay, Nantucket Sound, and Ockway Bay, and includes single and multi-family residential neighborhoods, two golf courses, and some commercial development. Development in the area has occurred under the provisions of a "special permit" since 1964 that subdivided New Seabury into 25 sections, each with different land use requirements. The WWTF was designed to treat wastewater from the failed on-site septic system at the Popponesset Inn as well as the New Seabury Country Club and a number of proposed commercial and residential projects, which discharge into a Zone II aquifer protection area. The New Seabury WWTF is not in either of the two MEP watersheds (Waquoit Bay East and Popponesset Bay).

Process Description. The following main components make up the New Seabury WWTF: two (2) pumping stations, a flow equalization tank, sludge holding tanks, aerobic RBCs for secondary treatment, secondary clarifiers, denitrification filter, pumping chambers, and effluent disposal (see Figure 6-4).

Sewage is collected by gravity sewers and force mains into two pumping stations, located at the Clubhouse (servicing the expanded Clubhouse and surrounding residential developments currently permitted by the New Seabury Special Permit) and the Popponesset Inn (servicing the Popponesset Inn, the Cabana Club, the Beach Club, the Market Place and surrounding vacant areas designated for residential development). The wastewater is then combined with supernatant generated at the three (3) 31,000-gallon sludge holding tanks where recycled sludge

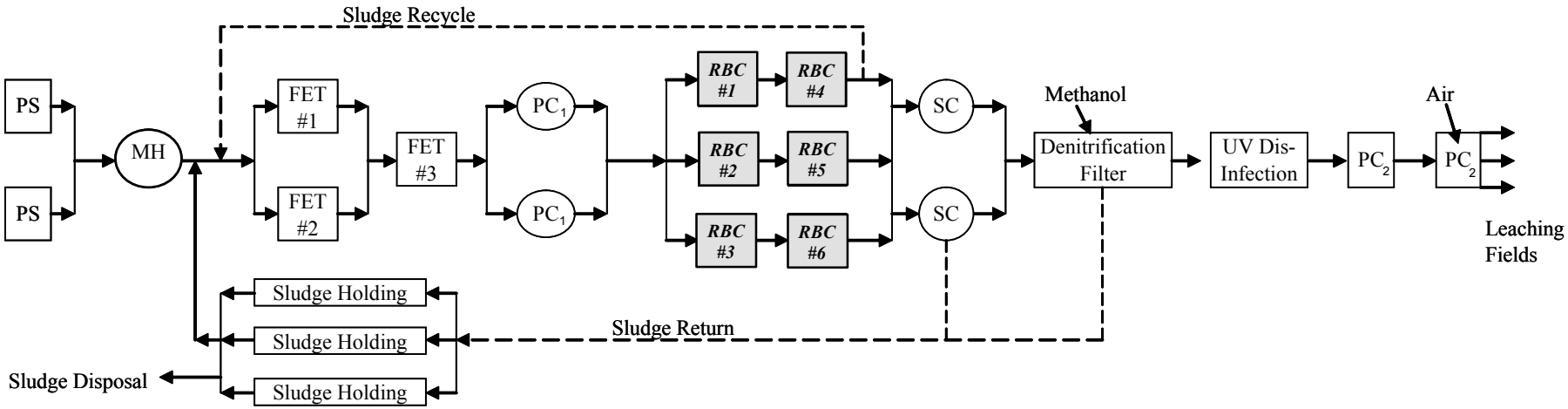

Legend:

PS = Pumping Station
FET = Flow Equalization Tank
PC = Primary Clarifier
MH = Manhole
SC = Secondary Clarifier
PC = Pumping Chamber
= equipment not currently in use

Data Source: Mass GIS
File Location: J:\GIS\GIS Project Folder\Job#\00074 Mashpee\2006 WWFP\Report Figures\00074F6-12 wb.mxd

Stearns & Wheler, LLC
Environmental Engineers and Scientists
HYANNIS, MASSACHUSETTS
phone: (508) 362-8890
web: www.stearnswheler.com

Date: 3/2007 Project No. 00074

TOWN OF MASHPEE, MASSACHUSETTS

Watershed Nitrogen Management Plan

New Seabury
Flow Schematic

FIGURE 6-4

from the RBC treatment trains is returned. (The sludge holding tanks are pumped every six months and the wasted sludge is transported to an off-site treatment facility.) This mixture is pumped by a duplex pumping system through two (2) 34,700-gallon flow equalization tanks and one (1) 10,700-gallon flow equalization tank to ensure a constant rate of flow into the primary clarifiers. The two (2) primary clarifiers, each 20 feet in diameter by 10 feet deep are used to remove suspended solids. The primary effluent then flows through three (3) trains made up of two (2) aerobic RBC units each (see process flow schematic). RBCs #1, #2, and #3 have a first stage surface area of 48,500 ft^2 and a second stage surface area of 60,000 ft^2, while RBCs #4, #5, and #6 have first and second stage surface areas of 71,250 ft^2, providing a total effective surface area of 753,000 ft^2. The RBCs are approximately 40 percent submerged into the wastewater and provide the site for biological BOD removal. From the second RBC in each train, a portion of the flow is recycled back to the flow equalization tanks at the head end of the WWTF, and the effluent wastewater flows into two (2) 20-ft diameter secondary clarifiers where any remaining sludge or suspended solids are settled out. Accumulated sludge from the secondary clarifiers is returned to the sludge holding tanks. Flow from the two (2) treatment trains is recombined at this point and passed through six (6) 34.82 ft^2 multi-media denitrification filter cells, where MicroC is added (for supplemental carbon) and nitrate is converted to nitrogen gas. This effluent is pumped through a Trojan UV disinfection system (rated at 208 gallons per minute) and into the 15,000-gallon effluent pumping chamber #1. From pumping chamber #1, the effluent is pumped into the 10,700-gallon pumping chamber #2, where air is diffused throughout the effluent, providing post-aeration to the final effluent. From pumping chamber #2, the effluent is discharged via three (3) forcemains to 120 leaching trenches (each 100-ft long), which are divided among four (4) leaching fields. These fields provide a total effective leaching area of 100,000 ft^2, and a maximum effluent loading rate of 3.0 gpd/ft^2 (a total effluent disposal capacity of 300,000 gpd).

Flow Capacity. The development at New Seabury was designed to treat (and permitted to discharge) 300,000 gpd. However, the wastewater flows actually received at the plant are significantly below that value. The average annual flow is just over 8,000 gpd (3% of total

capacity) and the maximum daily flow is approximately 40,000 gallons (13% of total capacity). These low flows require only one of the treatment trains and one primary clarifier to be in operation for adequate treatment. The 2001 Final Environmental Impact Report for New Seabury indicated that the 300,000 gpd design would provide "modest excess capacity", although "the actual amount of this excess will not be known until the entire New Seabury Development has been completed and is fully occupied.".

Based on information provided by the Town Planning Department, estimated average annual future flows will be 69,000 gpd. Table 6-3 shows the peaking factors that were used to estimate the maximum month and peak day future flows for the New Seabury WWTF.

TABLE 6-3

NEW SEABURY PEAKING FACTORS

	Maximum Month	**Peak Day**
Peaking Factor	1.4	2.2
Estimated Future Flow (gpd)	100,000	210,000
Note: Peaking factors are based on flow data from October 2004 – October 2005 and are the ratio of maximum month or peak flow to average annual flow.		

The estimates shown above were obtained using average peaking factors rather than site-specific factors. The peaking factors currently experienced by the New Seabury WWTF are considerably higher than average. This is assumed to be a result of the highly seasonal nature of the properties currently connected to the treatment plant and the limited number of total connections. The future wastewater flows come from the build-out analysis, which includes an increase in the number of properties connected to the facility. Based on these estimates, it appears that there is significant capacity available at the New Seabury WWTF. However, prior to determining the capacity of the New Seabury WWTF, several more years worth of data should be evaluated to determine a more accurate peaking factor for the peak month (this number is exceptionally high). Additionally, consideration should be given to the properties considered during the design phase

as potentially tying in to the WWTF. One of the purposes in constructing the New Seabury WWTF was to provide a solution for failing septic systems. It would appear that a minimal number of residential properties have tied in to the treatment plant. It may be necessary for more regulatory action to be taken in order to mandate connection to the facility.

An additional limitation to consider before expansion is the existing facility site. Expansion of the plant would require additional structures because of limited remaining space in the existing building. Also, the effluent disposal facilities are designed for 300,000 gpd. Any expansion to the WWTF would require a corresponding expansion of the disposal facilities.

Performance. The WWTF at New Seabury operates under Discharge Permit 698 with a flow limit of 300,000 gpd. The discharge permit limits and average annual influent and effluent wastewater characteristics are presented below for October 2004-October 2005 data.

TABLE 6-4

NEW SEABURY TREATMENT PERFORMANCE

Wastewater Characteristic	Permit Limit (mg/L)	Average Annual Influent (mg/L)	Average Annual Effluent (mg/L)	Percent Removal
BOD	30	446.0	11.8	97%
TSS	30	207.3	2.2	99%
Total N	10	35.8	2.5	93%
Nitrate-N	10	1.6	0.1	94%
Oils & Grease	15	39.2	0.4	99%

New Seabury had one exceedance. Effluent BOD had a concentration of 36 mg/L in October 2005. There were no exceedances of nitrogen limits, as illustrated on Figure 6-5. The nitrogen levels were consistently low and well below the permit level. A large part of the reason why this facility is achieving such high effluent water quality is the fact that it is receiving significantly smaller flows than the design flows. This represents a significant treatment capacity that is not being utilized. As discussed, the Town should consider mandating connection to maximize

treatment and minimize environmental impacts. Figure 6-5 illustrates the effluent nitrogen concentrations.

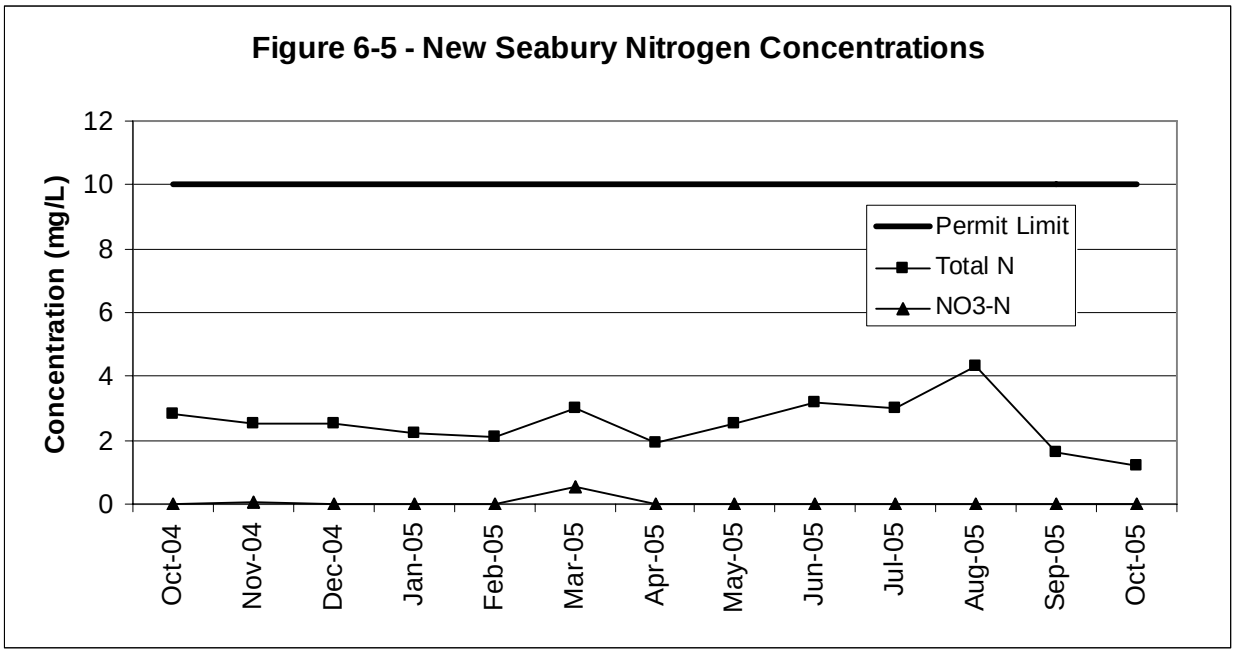

3. Mashpee High School Wastewater Treatment Facility

Identification and History. The SBR facility located off Route 151 at the back of the Mashpee High School was designed and permitted in 1995. The permit (#608) expired in 2000 and has not been renewed because the High School is appealing the terms of the renewal. The WWTF has been managed by Earth Tech since 1999, and currently serves students and faculty for grades seven though twelve in Mashpee. The Mashpee High School WWTF is in the Quashnet River subwatershed of Waquoit Bay East.

Process Description. The wastewater treatment facility at Mashpee High School is comprised of the following processes: influent pumping station, SBR-feed tank, an SBR for nutrient removal, secondary clarification, sand filtering, and effluent disposal (see Figure 6-6).

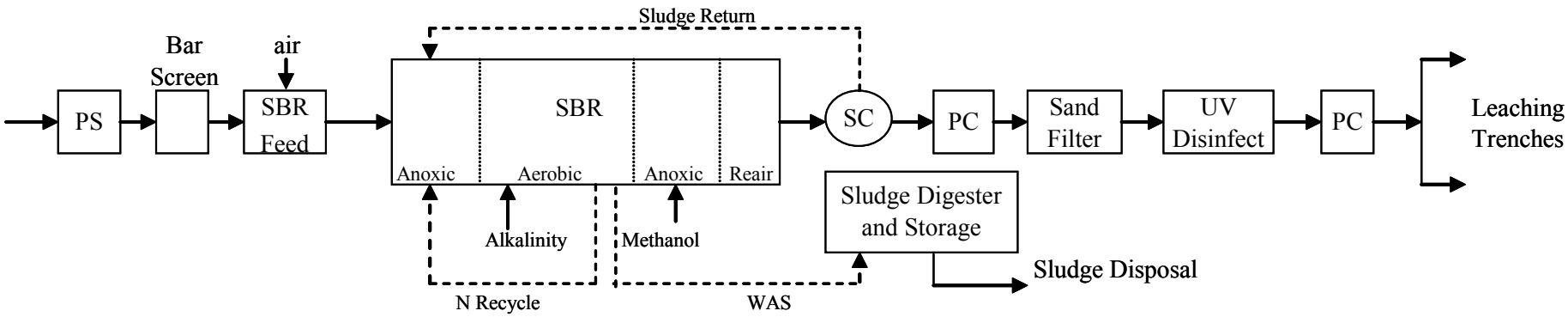

Legend: PS = Pumping Station
SBR = Sequencing Batch Reactor
SC = Secondary Clarifier
WAS = Waste Activated Sludge
PC = Pumping Chamber

Data Source: Mass GIS
File Location: J:\GIS\GIS Project Folder\Job#\
00074 Mashpee\2006 WWFP\Report Figures\
00074F6-12 wb.mxd

Stearns & Wheler, LLC
Environmental Engineers and Scientists
HYANNIS, MASSACHUSETTS
phone: (508) 362-8890
web: www.stearnswheler.com

Date: 11/2006 Project No. 00074

TOWN OF MASHPEE, MASSACHUSETTS

Watershed Nitrogen Management Plan

Mashpee High School
Flow Schematic

FIGURE 6-6

Wastewater that has been collected from the school flows from Sewer Manhole #8 into the influent pumping chamber, where it is pumped through a bar screen and into the 9,000-gallon SBR-feed tank. The purpose of the bar screen is to prevent rocks, rags, or other large objects from entering the treatment facility. The SBR feed tank is used for flow equalization and preliminary aeration before wastewater is pumped into the 3,750-gallon anoxic zone of the SBR. In this zone, flow is mixed prior to entering the 18,000-gallon aerobic zone of the SBR. The system then runs on a 6-hour react cycle schedule. Flow from the aeration zone is recycled back to the primary anoxic zone. Alkalinity is also added in the aerobic zone. This zone is followed by a second small (2,250-gallon) anoxic zone, which includes a mixer and methanol feed for enhanced nitrogen removal. Flow is then re-aerated in a 750-gallon zone of the SBR prior to discharge to the secondary clarifier.

After re-aeration, the reactor settles for 90 minutes. The sludge that has collected after this time is pumped to a sludge digester and the effluent is decanted and discharged into the 10-ft diameter secondary clarifier. Any additional sludge that has collected during secondary clarification is then recycled back to the first anoxic zone of the SBR. The clarified effluent then flows to the filter feed pump chamber where it is pumped through a rapid sand filter. The final effluent then flows into the final effluent pump chamber where it is pumped to two distribution boxes. Each distribution box discharges effluent to six (6) leaching trenches that are each 81-ft. long x 3-ft. wide.

The WWTF at Mashpee High School is currently utilizing all process components described above except the UV disinfection.

Flow Capacity. This plant is permitted to discharge 18,000 gpd, but is currently operating at a maximum monthly flow of 3,000 to 3,500 gpd, according to the operator and recorded data. The school was designed for a maximum capacity of 1,180 students. As of December 2006, there were 947 students and approximately 125 faculty and staff members. Additionally, the facility is used for community education classes in the evenings.

Based on the maximum capacity of 1,180 students, the estimated future flow will be 3,540 gpd. The current peaking factors and future peak flows are shown in the following table.

TABLE 6-5

MASHPEE HIGH SCHOOL PEAKING FACTORS

	Maximum Month	**Peak Day**
Peaking Factor	1.4	3.5
Estimated Future Flow (gpd)	4,800	13,000
Note: Peaking factors are based on flow data from October 2004 – October 2005 and are the ratio of maximum month or peak flow to average annual flow.		

These estimates indicate that there is nearly 30% available capacity at this WWTF. The facility site location is likely amenable to expansion. However, half of the High School's discharge area is located within a Zone II recharge area. As a result, any expansion of the plant will require further analysis. If permits are sought for additional flows, it is likely that a higher level of effluent treatment will be required, or the discharge area could be relocated outside of the Zone II area. This may require treatment processes beyond what is currently used. As is shown in the following paragraphs, treatment performance does not consistently meet permit requirements. Expansion of this plant to include year round residential flows may result in an improvement in performance.

Performance. The facility at Mashpee High School operates under discharge permit No. 608. These discharge limits are summarized in the following table along with October 2004-October 2005 influent and effluent data.

TABLE 6-6

MASHPEE HIGH SCHOOL TREATMENT PERFORMANCE

Wastewater Characteristic	Permit Limit (mg/L)	Average Annual Influent (mg/L)	Average Annual Effluent (mg/L)	Percent Removal
BOD	30	289.3	2.6	99%
TSS	30	220.6	0.8	99%
Total N	10	99.8	43.5	56%
Nitrate-N (1)	10	-	42.5	-
Oil & Grease	15	44.6	0	100%
(1) Influent wastewater is not typically sampled for Nitrate-Nitrogen				

Based on the average annual effluent data analyzed, the WWTF does not consistently operate within the permit effluent limits. Total Nitrogen and Nitrate Nitrogen exceeded permit limits for 9 of the 13 months analyzed. However, the other permit limit requirements did not appear to be exceeded. Figure 6-7 shows the Total Nitrogen and Nitrate Nitrogen levels.

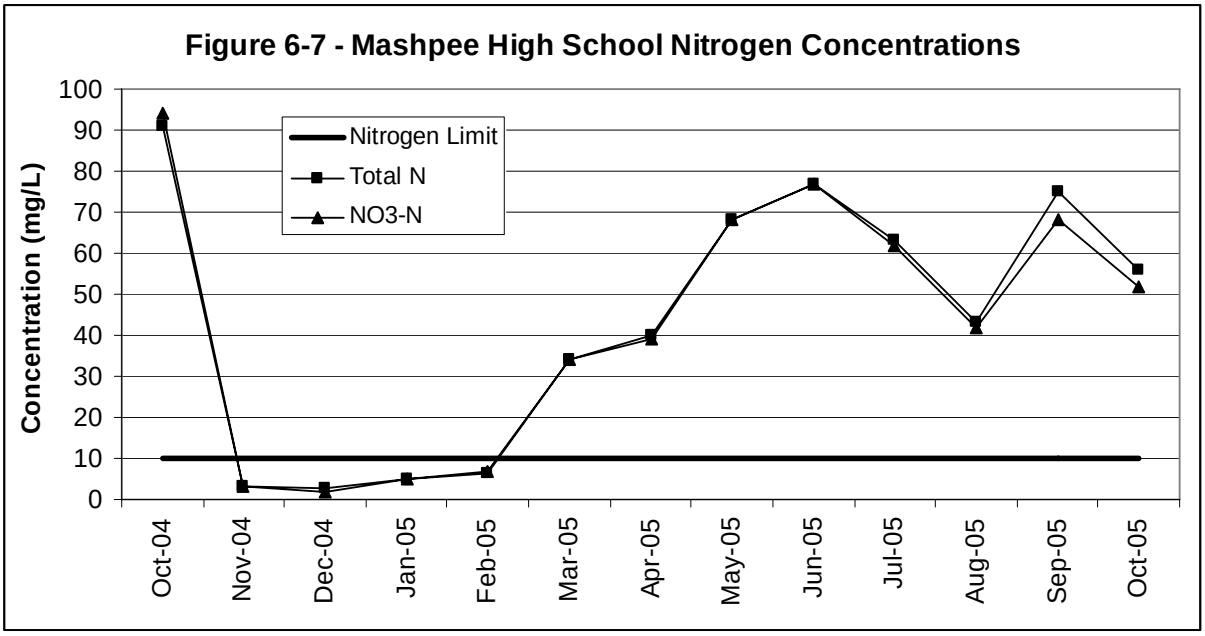

As this chart illustrates, effluent nitrogen concentrations ranged from nearly 100 mg/L to as low as 3 mg/L.

4. Willowbend Wastewater Treatment Facility

Identification and History. The WWTF at Willowbend is located off Quippish Road, near the Willowbend Golf Course. The facility has been in operation since 1994, and services primarily residential homes along Dunrobin Road, Willowbend Road, Eagle Drive, The Heights and the neighboring Cotuit Bay Condominiums. The Willowbend WWTF is in the Shoestring Bay subwatershed of Popponesset Bay.

Process Description. The components involved in this process include: primary settling, flow equalization, aerobic and anoxic RBCs, secondary clarification, rapid sand filters, UV disinfection, and effluent disposal. The flow schematic is illustrated in Figure 6-8.

Sewage is collected from four pumping stations that feed into the larger pumping station #1 and

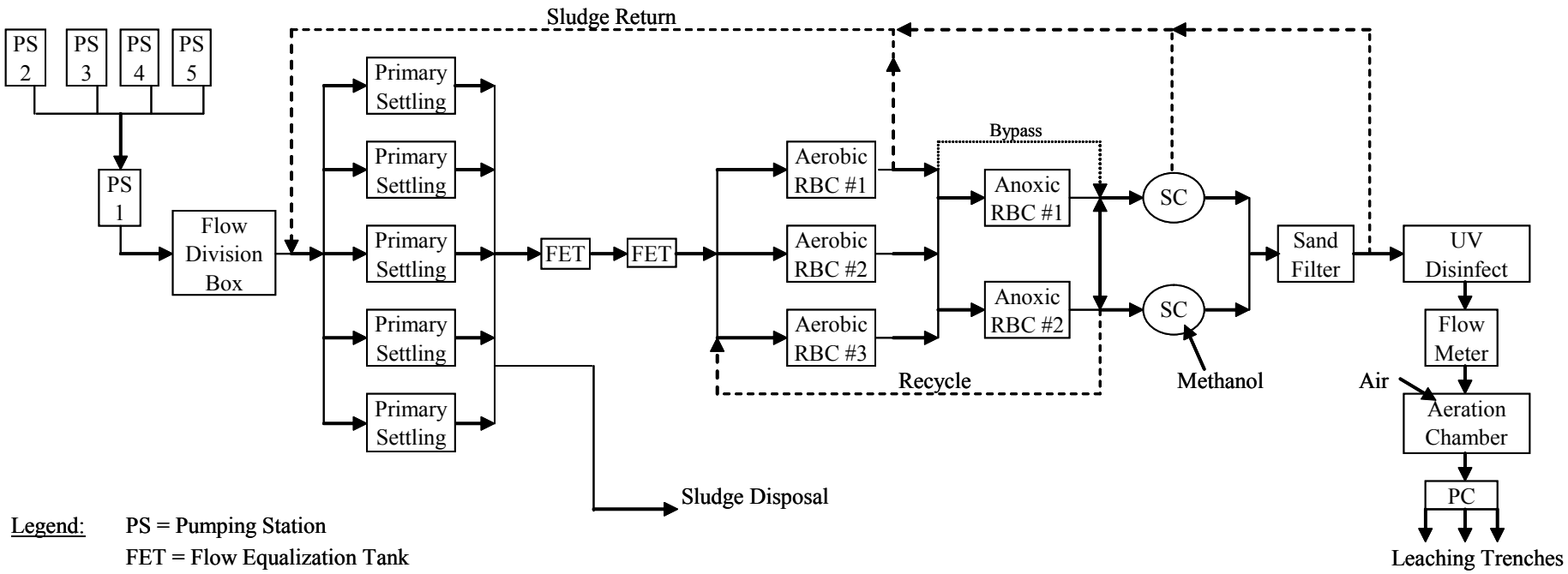

Legend:
PS = Pumping Station
FET = Flow Equalization Tank
PC = Pumping Chamber
SC = Secondary Clarifier
RBC = Rotating Biological Contactor

Data Source: Mass GIS
File Location: J:\GIS\GIS Project Folder\Job#\
00074 Mashpee\2006 WWFP\Report Figures\
00074F6-12 wb.mxd

Stearns & Wheler, LLC
Environmental Engineers and Scientists
HYANNIS, MASSACHUSETTS
phone: (508) 362-8890
web: www.stearnswheler.com

Date: 04/2007 Project No. 00074

TOWN OF MASHPEE, MASSACHUSETTS

Watershed Nitrogen Management Plan

Willowbend
Flow Schematic

FIGURE 6-8

into the plant. The flow is then equally divided among five (5) 27,000-gallon settling tanks for primary treatment (the total primary treatment capacity is 133,500-gallons). The primary effluent then flows through two (2) 22,750-gallon flow equalization tanks arranged in series, equipped with duplex pumps. This step ensures that an equalized flow will enter the biological treatment train. For this WWTF, aerobic and anoxic RBC units are used for nutrient removal. Wastewater is first distributed between three aerobic RBCs, each with an effective surface area of 98,800 ft^2. In this step, BOD is removed and organic nitrogen is converted to ammonia. The effluent from the aerobic RBCs is then redistributed to two (2) anoxic RBCs, each with an effective surface area of 23,600 ft^2. Activated sludge leaving the anoxic RBCs is recycled back to the aerobic RBCs at this point. The facility has also been designed with a bypass around the anoxic RBCs, to allow wastewater to flow directly from the aerobic RBC units to the secondary clarifiers (see schematic). The two secondary clarifiers are each 14 feet in diameter by 10 feet deep and are used to separate sludge from the treated wastewater. Methanol is also added. The clarified effluent that leaves the secondary clarifiers is then passed through a rapid sand filter containing four (4) 25 ft^2 dual media filter cells. The filter unit has four 5-HP backwash pumps and two 0.75-HP mudwell pumps. Sludge from the aerobic RBCs, secondary clarifiers, and the rapid sand filter are all recycled back to the primary settling tanks.

The effluent is then passed through a UV disinfection system and a flow-metering device before collecting in the first effluent aeration chamber. This chamber holds 2,500 gallons and provides 15 minutes of aeration time for the final effluent. Following aeration, the effluent flows into the 10,000-gallon effluent pumping chamber. From here, three pumps alternately discharge the final effluent to three leaching areas. Each leaching area contains 27 trenches that are 100-ft long x 3-ft wide. This provides a total leaching area of 82,950 ft^2.

Flow Capacity. The WWTF at Willowbend is permitted to discharge 113,000 gpd, although the average annual flow is only 25,000 gpd (about 22% of total permitted capacity). Maximum month flow is 46,000 gpd and peak day is 73,000 gpd. Based on Mashpee Planning Department information, the estimated average annual future flow for this WWTF is 60,000 gpd, which

includes the 86-unit Cotuit Bay Condominium Complex. Application of the peaking factors based on flows observed at the Willowbend WWTF is shown in Table 6-7.

TABLE 6-7

WILLOWBEND PEAKING FACTORS

	Maximum Month	**Peak Day**
Peaking Factor	1.8	2.9
Estimated Future Flow (gpd)	110,000	175,000
Note: Peaking factors are based on flow data from October 2004 – October 2005 and are the ratio of maximum month or peak flow to average annual flow.		

According to the WWTF operator, the Willowbend development is nearing its buildout. If that is true, the future flows (based on the current flow of 25,000 gpd) will be significantly lower than the projected average annual flow of 60,000. However, it is noted that the Willowbend development consists of a large number of seasonal residents. The buildout projection is based on the assumption that all of the residences are used year round. This means that the peaking factors may decrease as the development becomes more year round. If the average annual flow reaches the build-out estimates, the facility will be operating within 10% of its capacity. If the average annual flows are lower than expected, as indicated by the current averages and status of build-out, it is possible that there will be additional capacity. This should be evaluated in more detail when build-out status is confirmed.

During winter conditions, only one treatment train is in operation. During the summer, two (2) of the treatment trains are operating, indicating that there is some limited capacity available.

Performance. The discharge limits established under permit No. 577 for the Willowbend WWTF are presented below along with the average annual influent and effluent sampling data for October 2004-October 2005.

TABLE 6-8

WILLOWBEND TREATMENT PERFORMANCE

Wastewater Characteristic	Permit Limit (mg/L)	Average Annual Influent (mg/L)	Average Annual Effluent (mg/L)	Percent Removal
BOD	30	121.5	15.2	87%
TSS	30	90.1	8.4	90%
Total N	10	28.9	7.7	73%
Nitrate-N	10	1.1	5.0	-
Oils & Grease	15	15.2	0.2	99%

In general, the facility is performing very well. However, there were some Total Nitrogen exceedances in July, August, and September 2005. The nitrogen concentrations for the 12 month analysis period are illustrated in Figure 6-9.

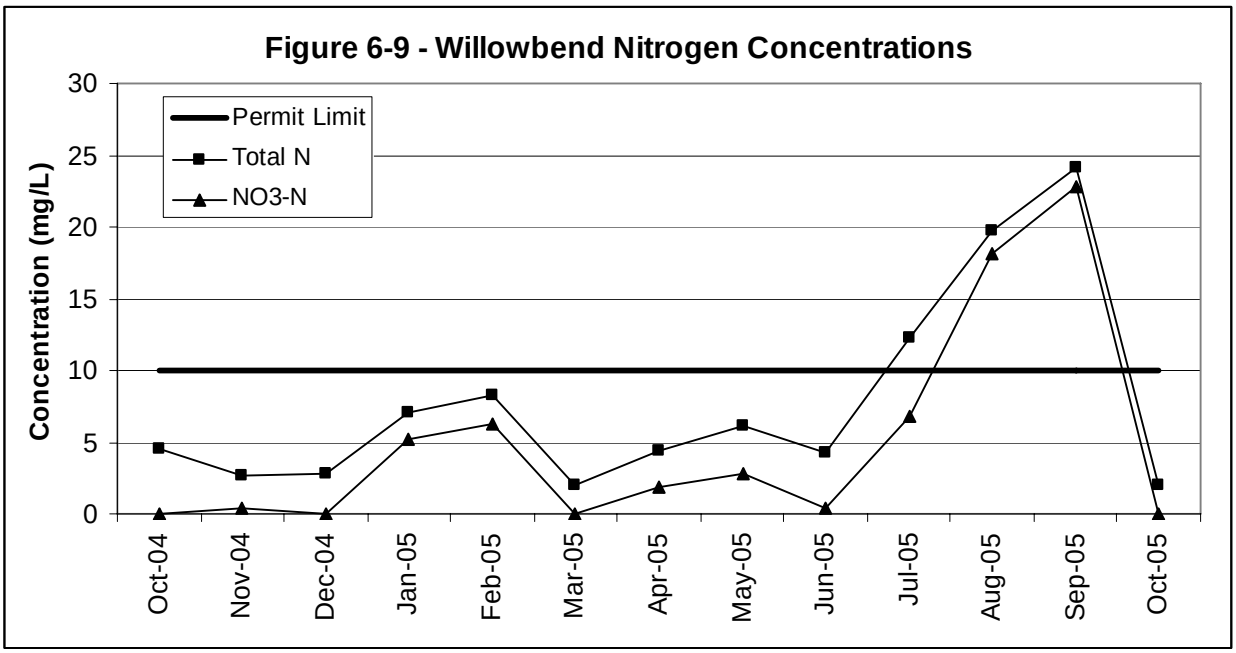

5. Southport Wastewater Treatment Facility

Identification and History. The WWTF at Southport was originally permitted and constructed in 1987 under the name Pine Hill Estates (SE# 0-272, July 1987). The facility was renovated and started back up in 1998, with a renewed groundwater discharge permit (SE# 272). The Southport WWTF is in the Quashnet River subwatershed of Waquoit Bay East.

Process Description. The major components of this facility include: primary clarifiers, sludge holding, flow equalization, aerobic and anoxic RBCs, secondary clarifiers, rapid sand filtration, and effluent disposal (see Figure 6-10).

Sewage is collected by gravity sewer and flows to one pumping station. This pumping station currently serves 35 units. The WWTF was originally designed so that wastewater would flow into the two (2) 15-ft diameter primary clarifiers for primary treatment. Sludge from these clarifiers would then be transported to the 23,000-gallon sludge holding tank and the effluent would travel to the 22,000-gallon flow equalization tank. The process has been altered from its original design, however, in that the Sludge Holding Tank and Flow Equalization tank are now used for primary treatment. As is illustrated in the previous diagram, raw wastewater currently flows directly into the sludge holding tanks, and the primary clarifiers remain unused.

Following primary treatment, the effluent is pumped from the flow equalization tank and distributed between the three aerobic RBC units, each with an effective surface area of 100,750 ft^2, where BOD is removed and ammonia is converted to nitrate. The wastewater then flows through two submerged anoxic RBCs where methanol is added and nitrate-nitrogen is converted to nitrogen. Each anoxic RBC unit has an effective surface area of 49,000 ft^2. Following nutrient removal in the RBC units, the effluent flows into the two 15-ft diameter clarifiers, where suspended solids are settled out. Sludge is collected and combined with sludge from the anoxic RBCs to be pumped back to the sludge holding tank. After leaving the clarifier, the secondary effluent is passed through two (2) rapid sand filters, each with a filter cell area of 28 ft^2. The

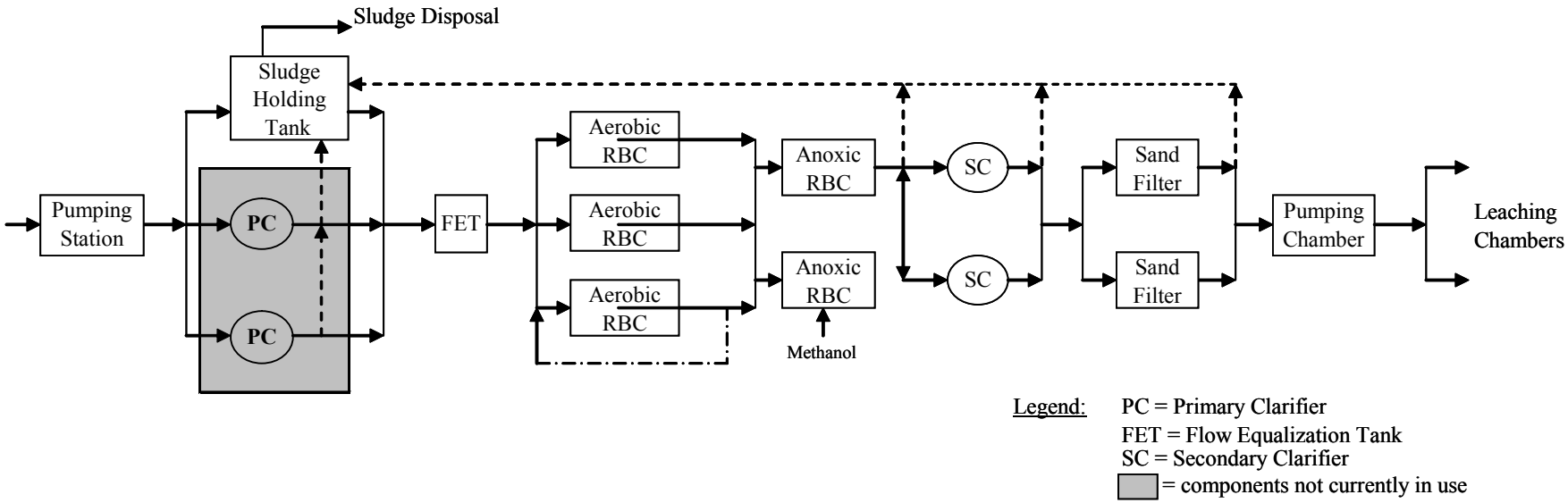

Data Source: Mass GIS
File Location: J:\GIS\GIS Project Folder\Job#\
00074 Mashpee\2006 WWFP\Report Figures\
00074F6-12 sp.mxd

Stearns & Wheler, LLC
Environmental Engineers and Scientists
HYANNIS, MASSACHUSETTS
phone: (508) 362-8890
web: www.stearnswheler.com

Date: 04/2007 Project No. 00074

TOWN OF MASHPEE, MASSACHUSETTS

Watershed Nitrogen Mangement Plan

Southport
Flow Schematic

FIGURE 6-10

filtrate then proceeds on to the 5,000-gallon effluent pumping chamber where duplex pumps discharge the effluent to leaching chambers divided over ten (10) leaching areas. The total available leaching area is 86,000 ft^2.

Flow Capacity. The facility is currently operating well below its flow capacity. The average annual flow is approximately 30,000 gpd (20% of its total flow capacity), with maximum month and peak daily flows of around 40,000 gpd and 50,000 gpd – 25% and 30%, respectively, of the total design capacity of 172,000 gpd. According to the operator, the development is approximately 75% complete. Buildout projections for Southport (based on Town Planning information) estimate a future flow of 105,000 gpd. Table 6-9 demonstrates the estimated future maximum month and peak day flows based on the peaking factors calculated from existing flow.

TABLE 6-9

SOUTHPORT PEAKING FACTORS

	Maximum Month	**Peak Day**
Peaking Factor	1.3	1.6
Estimated Future Flow (gpd)	140,000	170,000
Note: Peaking factors are based on flow data from October 2004 – October 2005 and are the ratio of maximum month or peak flow to average annual flow.		

The difference between estimated future flow (peak day) and design capacity is less than 3%. That indicates that expandability of the existing plant is limited. Additionally, expansion of the physical plant would be difficult due to the topography of the site and the existing facilities in the vicinity of the site. The WWTF is located within a Zone II and the effluent discharge site is partially within the Zone II. Any expansion of the plant would therefore require compliance with the MADEP Interim Guidelines for Reclaimed Water Use and more detailed analysis of the existing system's ability to meet these requirements. Effluent water quality limits are typically more stringent within Zone II areas, depending on the exact location of the discharge. This would need to be taken into consideration before planning an expansion of this WWTF.

Performance. The discharge limits established under permit No. 272 for the Southport WWTF are presented below, along with the average annual influent and effluent sampling data.

TABLE 6-10

SOUTHPORT TREATMENT PERFORMANCE

Wastewater Characteristic	Permit Limit (mg/L)	Average Annual Influent (mg/L)	Average Annual Effluent (mg/L)	Percent Removal
BOD	30	250.2	4.7	98%
TSS	30	96.3	1.5	98%
Total N (1)	10	-	8.0	-
Nitrate-N (1)	10	-	6.5	-
Oils & Grease	15	40.6	0	100%
(1) Influent wastewater is not typically sampled for Total Nitrogen or Nitrate-Nitrogen				

Average annual concentrations for all parameters were below the limits, although there were occasional monthly Nitrate Nitrogen and Total Nitrogen exceedances, as shown in Figure 6-11.

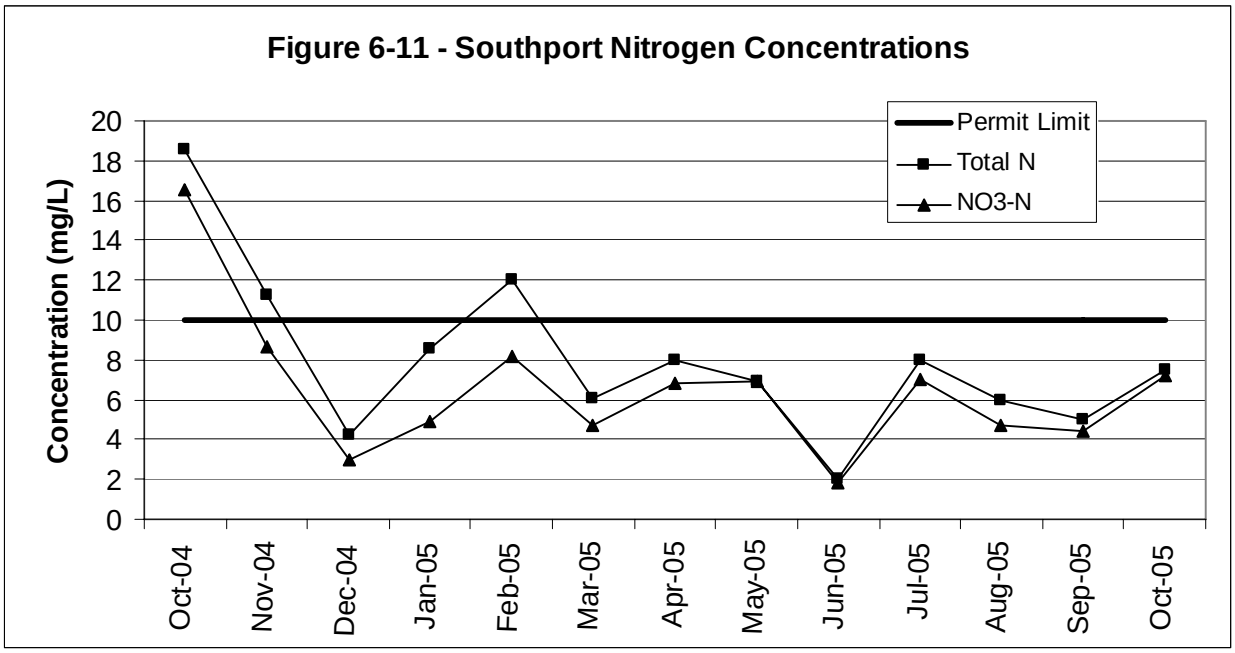

6. Stratford Ponds Wastewater Treatment Facility

Identification and History. The wastewater treatment facility at Stratford Ponds was built in 1996 and services most of the Stratford Ponds housing development. The Stratford Ponds WWTF is in the Shoestring Bay subwatershed of Popponesset Bay.

Process Description. The major components of the WWTF facility at Stratford Ponds include a lifting station, primary settling tanks, Amphidrome™ reactors, clearwells, Amphidrome™ Plus reactors, and effluent disposal (see Figure 6-12).

Wastewater is pumped from one lifting station and flows into two Amphidrome™ treatment trains. The Amphidrome™ process is a fixed-film, sequencing batch type process designed for nitrogen removal. It combines biofilter technology with an anoxic settling tank, a clearwell, and a denitrification process. Primary treatment for each treatment train occurs in an anoxic settling tank. Tank "A" holds 37,440-gallons and Tank "B" holds 33,600-gallons. Wastewater then flows by gravity from the settling tank through the biofilter in the 9.5' x 10' x 4' aerated Amphidrome™ reactor and into the 11,000-gallon clearwell. The Amphidrome™ reactor alternates between aerobic and anoxic treatment as the cycle is repeated. Sludge is collected and returned to the primary settling tank. In addition, wastewater flows to a 4-ft diameter anoxic Amphidrome™ Plus reactor, which contains a Tetra denitrification filter. The denitrified effluent then cycles back to the clearwell. The final effluents from the clearwells of the two treatment trains are combined at this point and discharged to 20 leaching pits. Each pit is 16 feet in diameter, has an effective depth of 12 feet, and has a leaching surface area of 800 ft^2.

The treatment process has also been designed so that methanol can be fed to the Amphidrome™ Plus reactors in the future, but it is not currently used.

Flow Capacity. This facility is permitted to discharge 35,500 gpd (no design flow data was available beyond what was identified on the permit). The 2004/2005 data showed a peak flow of

28,000 gpd, with the average annual flow around 12,000 gpd. These figures are 80% and 35%, respectively, of the permitted flow. The average annual flow at buildout is estimated to be 21,000 gpd. Table 6-11 shows the effect that existing peaking factors would have on the estimated buildout flow.

TABLE 6-11

STRATFORD PONDS PEAKING FACTORS

	Maximum Month	**Peak Day**
Peaking Factor	1.3	2.4
Estimated Future Flow (gpd)	28,000	51,000
Note: Peaking factors are based on flow data from October 2004 – October 2005 and are the ratio of maximum month or peak flow to average annual flow.		

Although the estimated peak day for buildout conditions is approximately 70% higher than the permitted flows, this can likely be attributed to the seasonal nature of the existing residences. As the current residences convert to year round use, peaking factors may decrease. Based on the permitted flow and existing data, it appears that the Stratford Ponds WWTF is currently operating close to its flow capacity. An additional factor that would make expansion of this plant less feasible is the location of the WWTF within a Zone II. Permits for additional capacity would likely require that a higher level of effluent treatment be achieved. This may require treatment processes beyond what is currently used. Design and permitting for the relocation of the leaching area is currently underway. The relocation will move the leaching area out of the Zone II area and is being done as an alternative to WWTF upgrades that would be required by MADEP if the leaching facility remained in the Zone II area.

Performance. The Amphidrome™ facility at Stratford Ponds operates under discharge permit No. 382. These permit limits are displayed below along with the average annual influent and effluent wastewater characteristics:

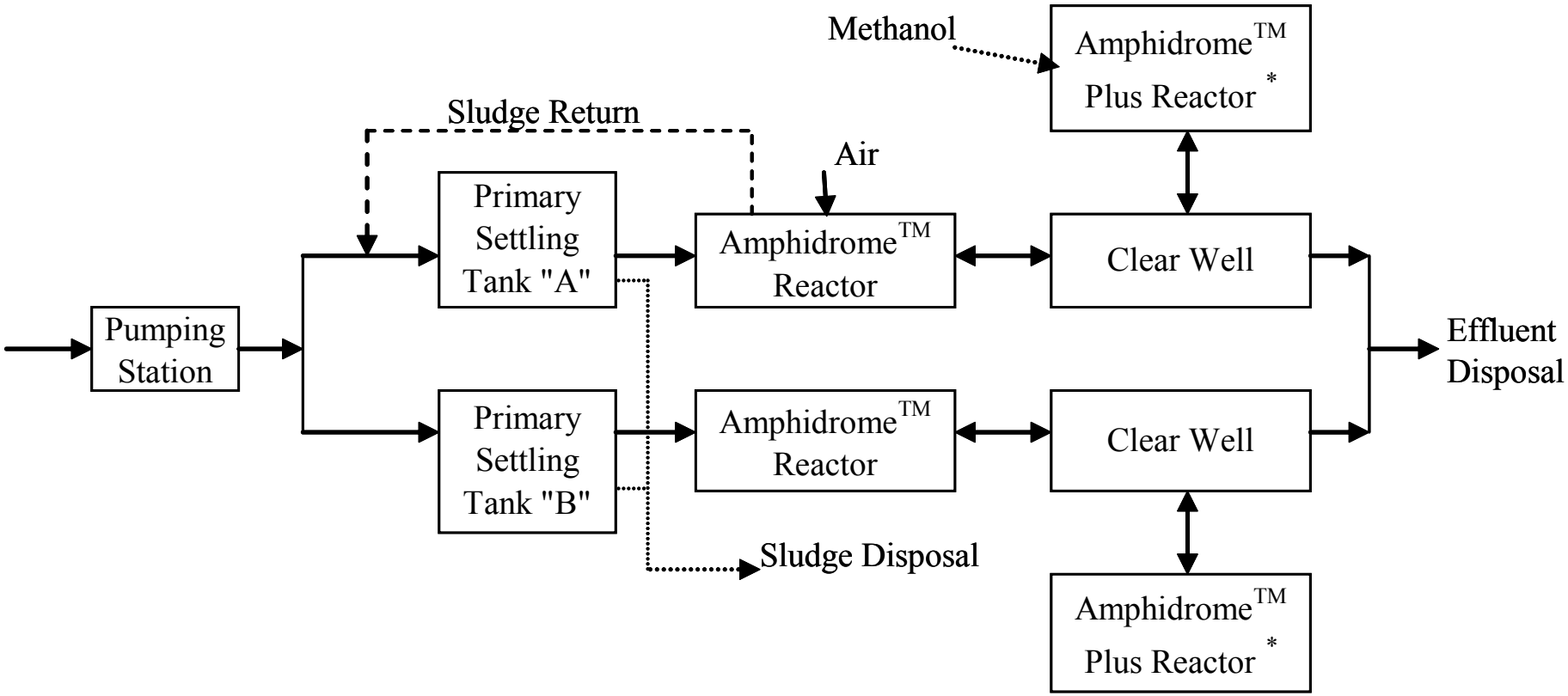

* Amphidrome™ Plus Reactors are Denitrification Filters

Data Source: Mass GIS
File Location: J:\GIS\GIS Project Folder\Job#\
00074 Mashpee\2006 WWFP\Report Figures\
00074F6-14 wc.mxd

Stearns & Wheler, LLC
Environmental Engineers and Scientists
HYANNIS, MASSACHUSETTS
phone: (508) 362-8890
web: www.stearnswheler.com

Date: 04/2007 Project No. 00074

TOWN OF MASHPEE, MASSACHUSETTS

Watershed Nitrogen Mangement Plan

Stratford Ponds
Flow Schematic

FIGURE 6-12

TABLE 6-12

STRATFORD PONDS TREATMENT PERFORMANCE

Wastewater Characteristic	Permit Limit (mg/L)	Average Annual Influent (mg/L)	Average Annual Effluent (mg/L)	Percent Removal
BOD	30	310.6	35.0	89%
TSS	30	126.9	4.4	97%
Total N (1)	10	-	11.2	-
Nitrate-N	10	0.2	2.8	-
Oils & Grease	15	50.6	0.9	98%
(1) Influent wastewater is not typically sampled for Total Nitrogen				

Based on the data, the facility does not consistently achieve permit compliance. BOD limits were exceeded for 6 of the 13 months analyzed. Additionally, Total Nitrogen limits were exceeded four (4) times, as shown in Figure 6-13.

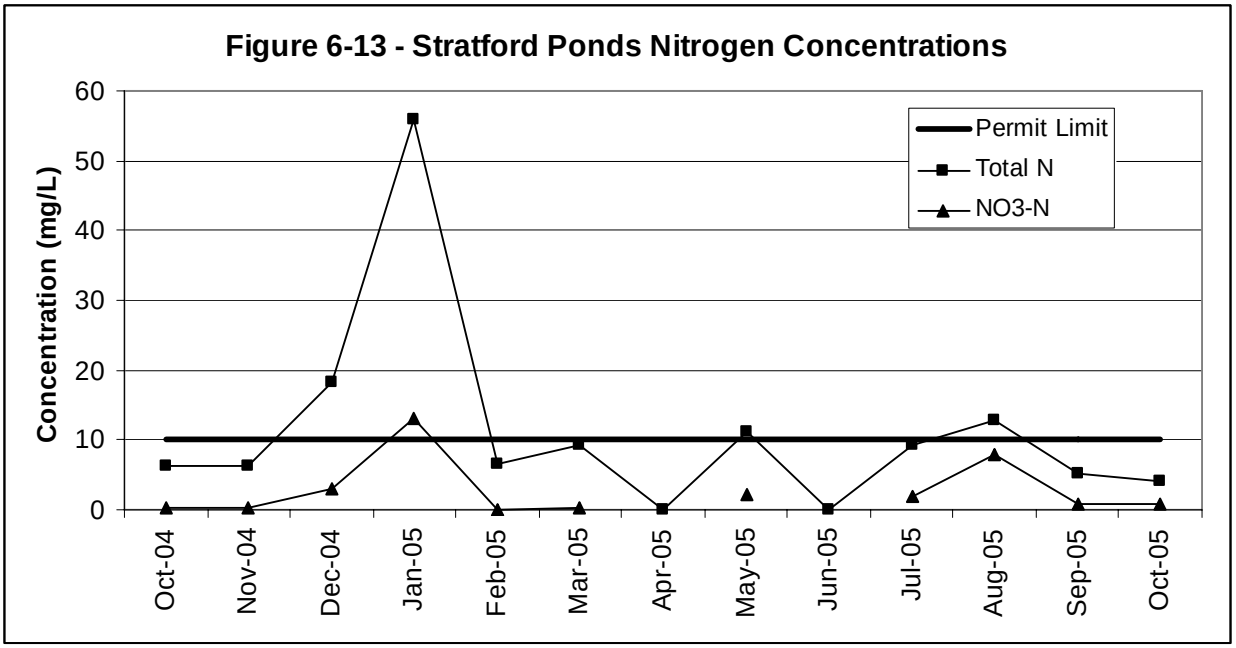

7. Windchime Point Wastewater Treatment Facility

Identification and History. The WWTF at Windchime Point provides wastewater treatment for a total of 145 units. The Windchime Point development is located off of Great Neck Road, with the WWTF located at the eastern end of the development. The Windchime Point WWTF is in the Mashpee River subwatershed of Popponesset Bay.

Process Description. The process at this Amphidrome™ facility is similar to the facility at Stratford Ponds, with the addition of two pumping chambers and a UV disinfection system (see Figure 6-14).

Flow Capacity. This Amphidrome™ facility is permitted to discharge 40,000 gpd (also the design flow). The average annual flow is around 10,000 gpd – only 25% of the permitted limit. The maximum flow was only 60% of the permitted limit – 24,000 gpd. The estimated buildout flow for the Windchime Point development is 22,000 gpd (based on Planning Department information). The following table summarizes the estimated future peak flows.

TABLE 6-13

WINDCHIME POINT PEAKING FACTORS

	Maximum Month	**Peak Day**
Peaking Factor	1.4	2.4
Estimated Future Flow (gpd)	30,000	52,000
Note: Peaking factors are based on flow data from October 2004 – October 2005 and are the ratio of maximum month or peak flow to average annual flow.		

These estimated values indicate that the WWTF will be operating at its flow capacity when buildout conditions are reached. It is possible that there is room for expansion of the building (where the control systems are housed), though a more detailed analysis of the property would be required to determine the possibility of expanding the underground process tanks.

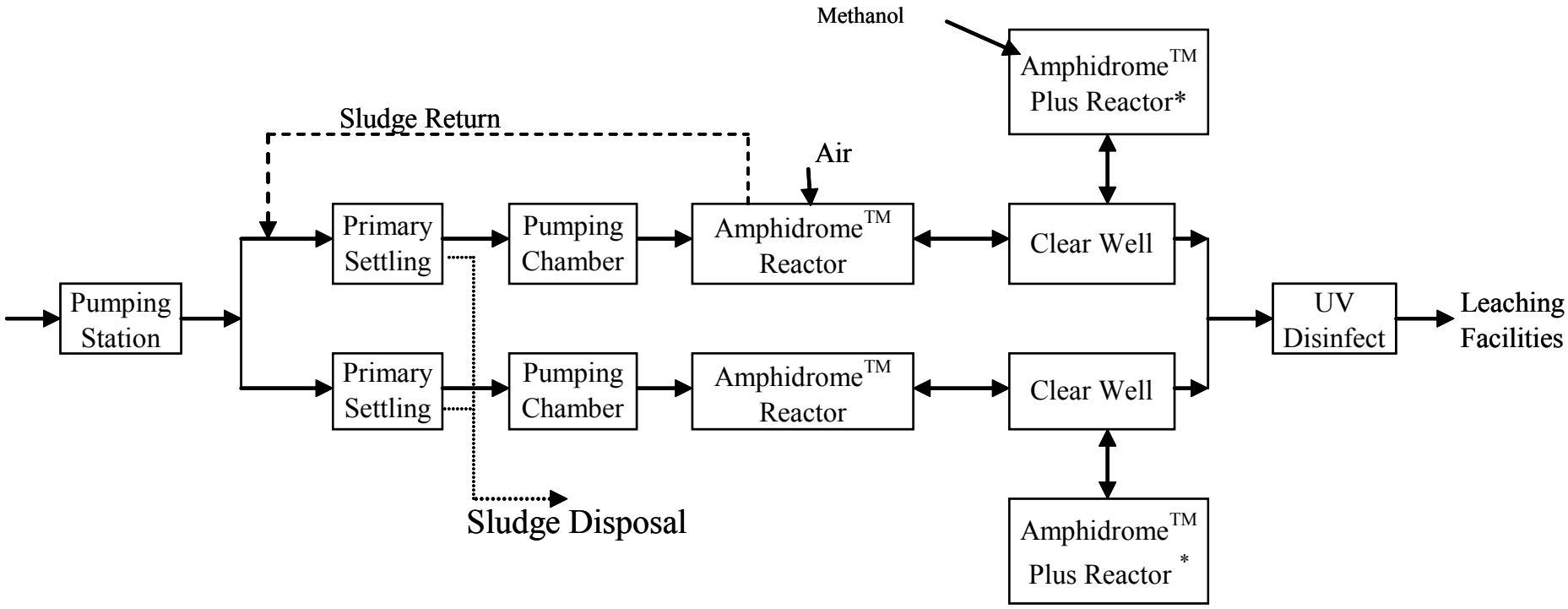

* Amphidrome™ Plus Reactors are Denitrification Filters

Data Source: Mass GIS
File Location: J:\GIS\GIS Project Folder\Job#\00074 Mashpee\2006 WWFP\Report Figures\00074F6-14 wc.mxd

Stearns & Wheler, LLC
Environmental Engineers and Scientists
HYANNIS, MASSACHUSETTS
phone: (508) 362-8890
web: www.stearnswheler.com

Date: 04/2007 Project No. 00074

TOWN OF MASHPEE, MASSACHUSETTS

Watershed Nitrogen Management Plan

Windchime Point Flow Schematic

FIGURE 6-14

Performance. Discharge permit No. 263 was issued for this facility. The discharge permit limits and flow characteristics from October 2004-October 2005 are summarized in Table 6-14.

TABLE 6-14

WINDCHIME POINT TREATMENT PERFORMANCE

Wastewater Characteristic	Permit Limit (mg/L)	Average Annual Influent (mg/L)	Average Annual Effluent (mg/L)	Percent Removal
BOD	30	273.4	15.7	94%
TSS	30	251.5	10.6	96%
Total N	10	-	6.0	-
Nitrate-N	10	-	2.2	-
Oils & Grease	15	31.1	0.5	98%

In 2005-2006 the Windchime Point facility performed well and had only one permit exceedance – Total Nitrogen in October 2005. However, the months prior to that exceedance showed a consistent rise in both Nitrate Nitrogen and Total Nitrogen. Without further data, it is not certain whether or not this facility was having operational problems or if the nitrogen levels began decreasing again.

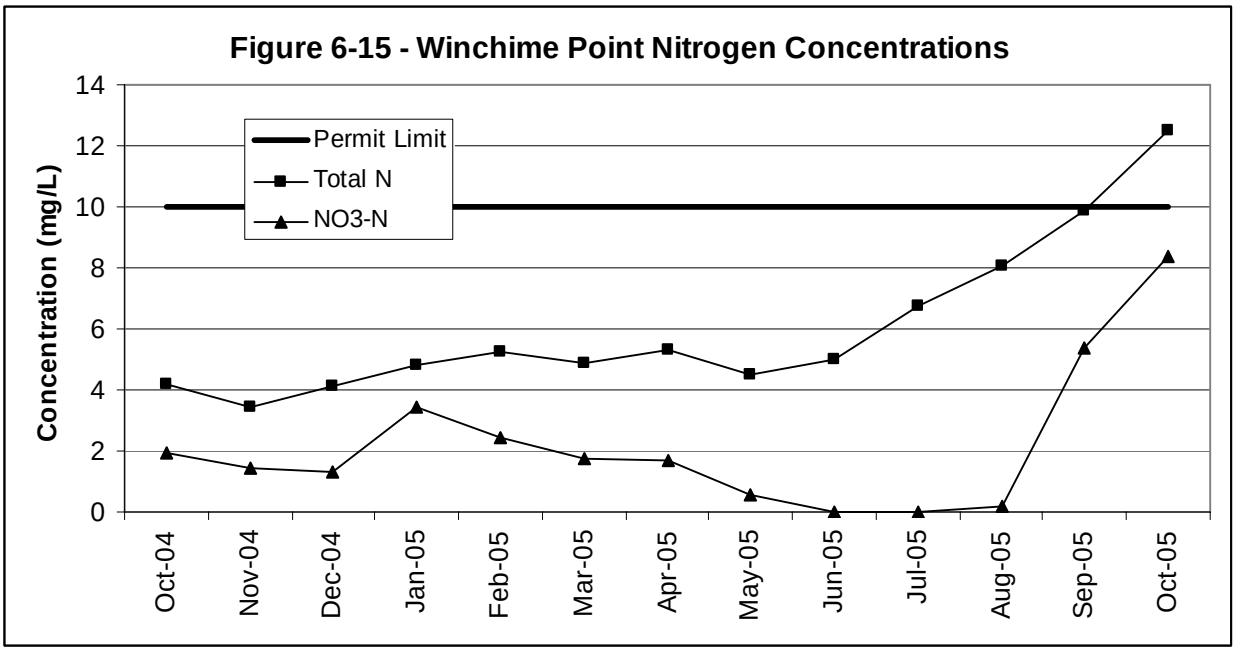

8. South Cape Village Wastewater Treatment Facility

Identification and History. This facility is located along Donna's Lane in Mashpee, near the intersection of Route 28. The WWTF was designed in 1999 and permitted in 2001 to accommodate a variety of land uses from both on-site and off-site flows. Onsite flows are contributed from 160,000 square feet of building area, and off-site flows coming from the Life at Mashpee residential development, Liquor Warehouse, and some office space. South Cape Village and its WWTF are in the Mashpee River subwatershed of Popponesset Bay.

Process Description. The main components of the facility at South Cape include primary settling, nutrient removal using Amphidrome™ and Amphidrome™ Plus Reactors, a clearwell, and effluent disposal, as shown on Figure 6-16.

On-site wastewater flows by gravity through a sewer system located along South Street into a wet well and submersible pumping system in the southwesterly parking area. This flow is combined with off-site flows to enter the 31,000-gallon primary settling tank. Wastewater then cycles through the Amphidrome™ Reactor, the 16,000-gallon clearwell, and the Amphidrome™ Plus Reactor (with denitrification filter), as was described for the Stratford Ponds WWTF. Final effluent is pumped from the clearwell through two (2) forcemains to two (2) leaching sites. The leaching sites have a total of 16 trenches that are each 100 feet long, providing a total leaching area of 9600 ft^2.

Flow Capacity. The facility is designed with a flow of 24,000 gpd, although average annual flows are approximately 8,500 gpd, with a maximum month of 8,900 gpd. The peak day flow for the 2004/2005 analysis period was 14,222 gpd, which represents 60% of the treatment facility's capacity. The buildout wastewater flow estimate generated by means of Planning Department information is nearly 16,000 gpd, just less than double the currently observed flows. However, if the peaking factor for the maximum day is applied to that flow, the difference between the design flow (24,000 gpd) and the peaked estimated flow is less than 10% (as shown

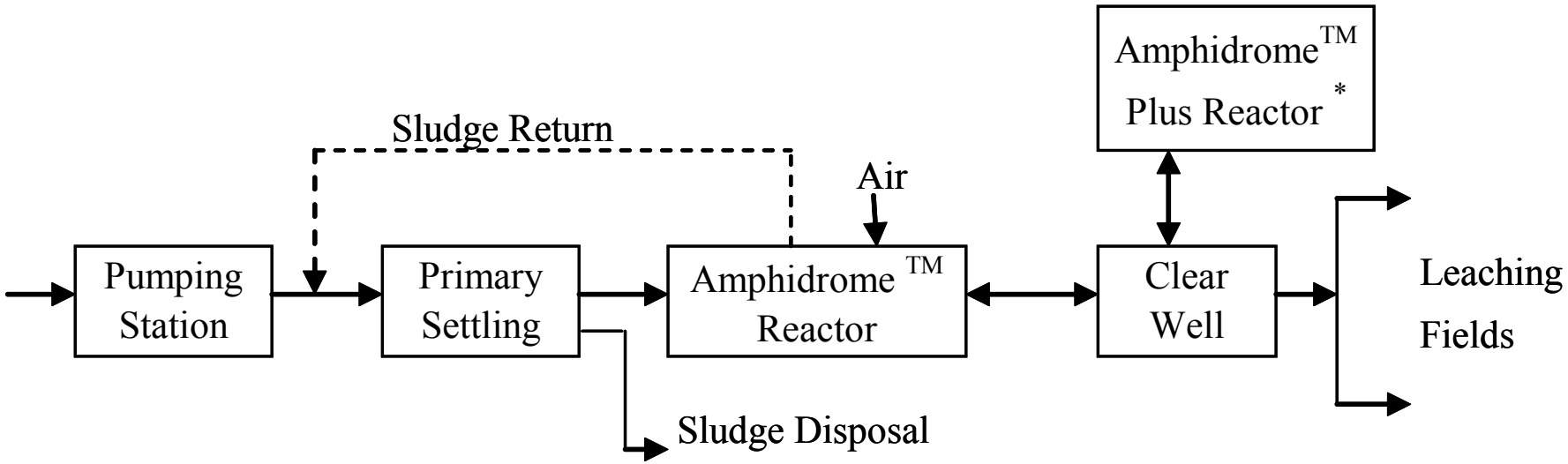

* Amphidrome™ Plus Reactor is a Denitrification Filter

Data Source: Mass GIS
File Location: J:\GIS\GIS Project Folder\Job#\00074 Mashpee\2006 WWFP\Report Figures\00074F6-16.mxd

Stearns & Wheler, LLC
Environmental Engineers and Scientists
HYANNIS, MASSACHUSETTS
phone: (508) 362-8890
web: www.stearnswheler.com

Date: 04/2007 Project No. 00074

TOWN OF MASHPEE, MASSACHUSETTS

Watershed Nitrogen Management Plan

South Cape Village
Flow Schematic

FIGURE 6-16

in Table 6-15), indicating that the plant is appropriately sized with minimal room for expansion.

TABLE 6-15

SOUTH CAPE VILLAGE PEAKING FACTORS

	Maximum Month	**Peak Day**
Peaking Factor	1.1	1.7
Estimated Future Flow (gpd)	17,000	27,000
Note: Peaking factors are based on flow data from October 2004 – October 2005 and are the ratio of maximum month or peak flow to average annual flow.		

Another concern when evaluating expansion potential at the South Cape Village WWTF is the location of the facilities. The majority of the treatment processes are in underground tanks, located under a shopping plaza parking lot. The control building is also in the parking area, fairly close to the grocery store building and a sizeable stormwater detention pond, limiting room to expand depending on where new structures would go as the plaza is expanded.

Performance. Because of incomplete data in the monthly monitoring reports, it is unclear how consistently the facility is meeting all of the permit limits. Only five months of complete data were available. Although water quality parameters were available for most months, daily flow data was not provided. Table 6-16 summarizes the permit limits and the water quality characteristics based on the provided information.

TABLE 6-16

SOUTH CAPE VILLAGE TREATMENT PERFORMANCE

Wastewater Characteristic	**Permit Limit (mg/L)**	**Average Annual Influent (mg/L)**	**Average Annual Effluent (mg/L)**	**Percent Removal**
BOD	30	412.5	13.5	97%
TSS	30	165.4	12.7	92%
Total N	10	-	9.5	-
Nitrate-N	10	-	5.0	-
Oils & Grease	15	84.9	6.1	93%

Figure 6-17 illustrates the nitrogen levels for the months that had data. Total Nitrogen exceeded the permit limit multiple times; Nitrate Nitrogen did not exceed the limit. The only other permit exceedance was a BOD exceedance in October 2005.

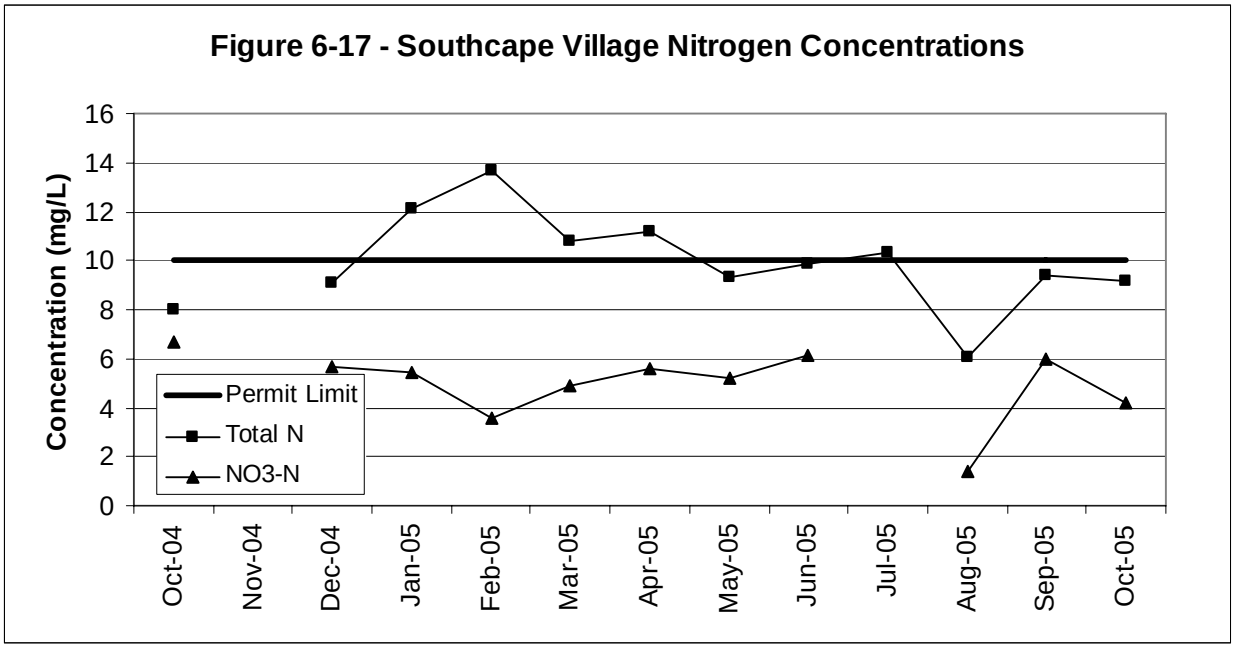

9. **Forestdale School Wastewater Treatment Facility**

Identification and History. The Forestdale School WWTF has been operating since 1990. The WWTF is located behind the Forestdale Elementary School on Route 130 in the Town of Sandwich. In addition to providing treatment for wastewater from the school, the WWTF receives approximately 3,500-4,500 gallons per month of septage from Town Hall for treatment. The Forestdale School is in the Fresh Water subwatershed of Popponesset Bay.

Process Description. The components that make up the treatment process are the primary settling tank, an equalization tank, one (1) RBC, a secondary clarifier, two (2) polishing filters, and effluent discharge via leaching pits.

Sewage collects in the 15,000-gallon primary settling tank, which is also where the septage is received. From the settling tank, the primary effluent flows to a 10,000-gallon equalization tank to ensure equalized flow entering the treatment train. The primary effluent is pumped from the equalization tank by means of two (2) 14 gpm pumps to the aerobic RBC. The RBC provides 68,400 effective square feet of media area. The RBC stage is where BOD, TSS, and ammonia are reduced. A ten-foot diameter secondary clarifier follows the RBC. After most of the sludge is settled out in the secondary clarifier, effluent flows through one of two polishing filters.

After the treatment process, effluent is pumped to the discharge field. The discharge field consists of twenty four (24) leaching pits located under the school's soccer fields. The leaching pits are eight feet in diameter with an additional two feet of stone surrounding the structure, thereby providing an effective diameter of twelve feet and an effective depth of six feet.

No chemicals are added to the treatment process. The flow schematic is shown in Figure 6-18.

Flow Capacity. The Forestdale School WWTF was designed to treat 20,000 gpd of wastewater. However, average annual flow is just over 1,000 gpd (about 10% of the design flow), indicating substantial room for expansion. Even when the maximum month (2,400 gpd) and the peak day (6,600 gpd) flows are evaluated, there is considerable room for expansion. The peak day flow is approximately 30% of the design flow.

TABLE 6-17

FORESTDALE SCHOOL PEAKING FACTORS

	Maximum Month	**Peak Day**
Peaking Factor	2.1	5.7
Note: Peaking factors are based on flow data from December 2005 – January 2007 and are the ratio of maximum month or peak flow to average annual flow.		

Any expansion to this facility should take into consideration the seasonal fluctuations in the flow that are experienced. Flows in the summer months can drop to 0 for several days at a time.

Additionally, the Forestdale School and its WWTF are located within a Zone II area. This would mean that any expansion would be required to meet stricter effluent water quality limits.

Performance. The permit for the Forestdale School limits BOD to 30 mg/L, TSS to 30 mg/L, and Oil and Grease to 15 mg/L; there is no nitrogen limit stipulated in the permit. Based on the monitoring data that was reviewed, there were no exceedances of the permit limits at this facility. Although the permit limit for oil and grease has not been exceeded, there have been months when the oil and grease concentration in the effluent has been higher than the concentration in the influent. If the results are not a result of analytical error, the effluent leaching pits may be impacted by oil and grease. In addition, it should be noted that there is no nitrogen limit in the GWDP for this facility; therefore, nitrogen is not monitored.

The treatment performance is summarized below in Table 6-18.

TABLE 6-18

FORESTDALE SCHOOL TREATMENT PERFORMANCE

Wastewater Characteristic	Permit Limit (mg/L)	Average Annual Influent (mg/L)	Average Annual Effluent (mg/L)	Percent Removal
BOD	30	137.0	4.0	88%
TSS	30	1159.8	10.6	87%
Oils & Grease	15	10.5	2.5	39%

According to the operator, there was a denitrification filter planned at one point. If additional flows to the Forestdale School WWTF are considered, addition of a denitrification filter may be required. The treatment building would likely require significant expansion if additional flows were added. The existing treatment train provides minimal redundancy. A minimum of one (1) additional treatment train should be considered when considering adding flow to this WWTF.

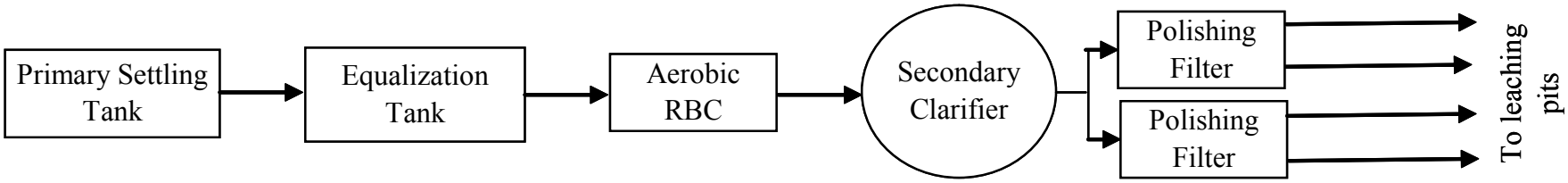

RBC=Rotating Biological Contactor

Data Source: Mass GIS
File Location: J:\GIS\GIS Project Folder\Job#\00074 Mashpee\2006 WWFP\Report Figures\00074F6-18.mxd

Stearns & Wheler, LLC
Environmental Engineers and Scientists
HYANNIS, MASSACHUSETTS
phone: (508) 362-6890
web: www.stearnswheler.com

Date: 3/2007 Project No. 00074

TOWN OF MASHPEE, MASSACHUSETTS

Watershed Nitrogen Management Plan

Forestdale School Flow Schematic

FIGURE 6-18

10. Massachusetts Military Reservation Wastewater Treatment Facility

Identification and History. Although this facility is located outside of the PPA, it is mentioned for the purposes of this document because it is close to the Mashpee border and Mashpee is interested in investigating the feasibility of using the force main and sandbeds for disposal of some of the Town's treated wastewater. The WWTF that serves the Reservation is not in either of the MEP watersheds.

The Massachusetts Military Reservation WWTF was designed by Camp Dresser & McKee and has been in operation since 1995. It serves units on the Military Reservation.

Process Description. The process consists of pretreatment, primary settling, aerated oxidation ditches, secondary clarification with recycle, and effluent disposal (see Figure 6-19).

Flow Capacity. The facility has a maximum monthly design capacity of 0.43 mgd and a maximum daily design capacity of 0.80 mgd. If the Town chooses to seek additional flow capacity outside the Town, this facility may be evaluated further to establish if there is any available capacity and to evaluate the possibility of negotiating for use of some of that capacity.

D. Summary

The following table summarizes the percent of flow capacity that is currently used at each of the WWTFs and the estimated amount of flow capacity that will be used under buildout conditions.

TABLE 6-19

USED WWTF CAPACITY

WWTF	Design Flow (gpd)	Existing Flows		
		Average Annual	Maximum Month	Peak Day
Mashpee Commons	180,000			
Percent of Capacity – Existing		11%	16%	22%
Percent of Capacity – Future		59%	88%	117%
New Seabury	300,000			
Percent of Capacity – Existing		3%	5%	13%
Percent of Capacity – Future		23%	32%	69%
Mashpee Senior High School	18,000			
Percent of Capacity – Existing		15%	20%	52%
Percent of Capacity – Future		20%	27%	70%
Willowbend	113,000			
Percent of Capacity – Existing		22%	41%	65%
Percent of Capacity – Future		53%	98%	155%
Southport	172,000			
Percent of Capacity – Existing		17%	23%	28%
Percent of Capacity – Future		61%	81%	97%
Stratford Ponds	35,500			
Percent of Capacity – Existing		34%	44%	80%
Percent of Capacity – Future		60%	78%	144%
Windchime Point	40,000			
Percent of Capacity – Existing		25%	35%	61%
Percent of Capacity – Future		55%	76%	131%
South Cape Village	24,000			
Percent of Capacity – Existing		35%	37%	59%
Percent of Capacity – Future		66%	69%	110%
Forestdale School	20,000			
Percent of Capacity – Existing		6%	12%	33%

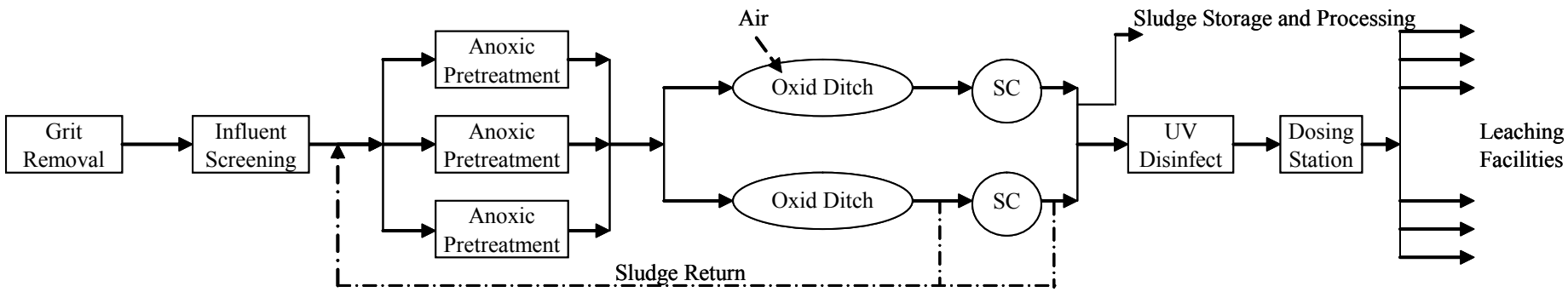

Legend: Oxid Ditch = Aerated Oxidation Ditches
SC = Secondary Clarification
UV Disinfect = Ultra-Violet Disinfection

Data Source: Mass GIS
File Location: J:\GIS\GIS Project Folder\Job#\
00074 Mashpee\2006 WWFP\Report Figures\
00074F6-20.mxd

Stearns & Wheler, LLC
Environmental Engineers and Scientists
HYANNIS, MASSACHUSETTS
phone: (508) 362-8890
web: www.stearnswheler.com

Date: 3/2007 Project No. 00074

TOWN OF MASHPEE, MASSACHUSETTS

Watershed Nitrogen Management Plan

Massachusetts Military Reservation
Flow Schematic

FIGURE 6-19

Based on the factors considered previously in this chapter, the following package wastewater treatment plants are recommended for further consideration to evaluate expansion potential:

- Mashpee Commons (capacity of denitrification filters needs to be evaluated)
- New Seabury (Zone II requirements need to be considered)
- Mashpee High School (Zone II requirements need to be considered)
- Southport (Zone II requirements need to be considered; actual flows should be considered once build-out is achieved)
- Forestdale School (consideration should be given to addition of denitrification filters and any Zone II requirements)

Willowbend and Windchime Point may possibly be considered for expansion. More data will need to be obtained from the Windchime Point facility to determine more accurate average flows. Willowbend will need more extensive evaluation to determine the percent of the development that is seasonal, how much more construction is expected, and more long-range average flows.

Stratford Pond and South Cape Village should not be considered for further expansion. Stratford Pond is currently within a Zone II and projected build-out conditions will likely approach the plant's capacity. South Cape Village has limited room for expansion, and future flows will likely approach the plant's capacity.

These various possibilities will be incorporated into later phases of this project as alternative solutions are developed and evaluated.

The capacities evaluated as part of this study were based on design data and sampling data from October 2004 through October 2005. The peaking factors were also obtained from the flow information from that time period. Typically, data for several years is evaluated when analyzing performance and capacity of treatment facilities. Some facilities, such as Windchime Point, have

not been in operation long enough to accumulate enough data. Other facilities, such as New Seabury, are currently operating so far below their operating capacity that a true evaluation of their performance is impossible at this time. Additionally, the available capacity of these plants could not be determined until more of the treatment capacity is being used (50-80% of permitted flow).

It should also be noted that the capacity analyses performed evaluated only the flow capacity of the treatment plant. The collection systems would need to be evaluated more closely before considering expansion of any of the existing facilities. Also, a number of these facilities are approaching or have exceeded their permit expiration. Those facilities that discharge within a Zone II will require additional evaluation and possible upgrade to achieve the existing guidelines as identified in the Interim Guidelines for Reclaimed Water Use.