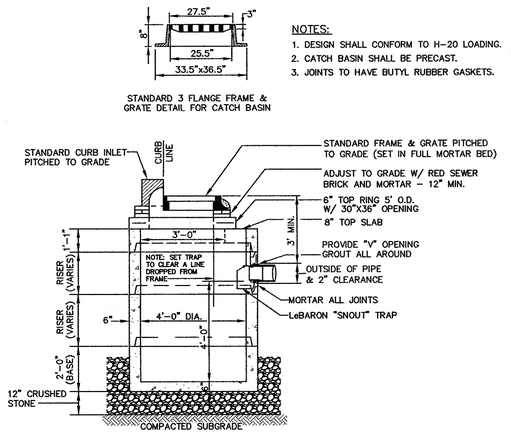

NOTES:

1. DESIGN SHALL CONFORM TO H-20 LOADING.
2. CATCH BASIN SHALL BE PRECAST.
3. JOINTS TO HAVE BUTYL RUBBER GASKETS.

CATCH BASIN WITH CURB INLET/HOOD

SCALE: NONE

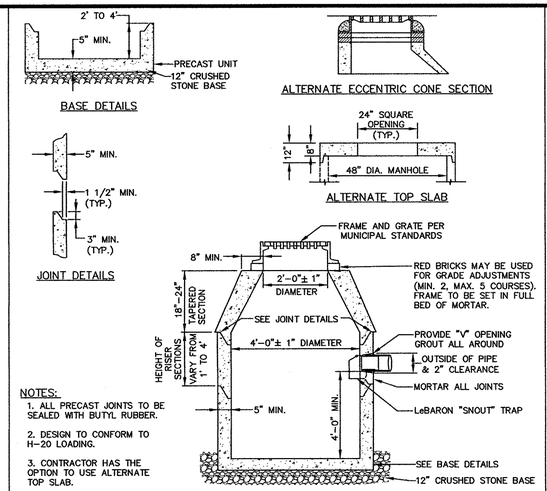

NOTES:

1. ALL PRECAST JOINTS TO BE SEALED WITH BUTYL RUBBER.
2. DESIGN TO CONFORM TO H-20 LOADING.
3. CONTRACTOR HAS THE OPTION TO USE ALTERNATE TOP SLAB.

PRECAST CONCRETE CATCH BASIN

SCALE: NONE

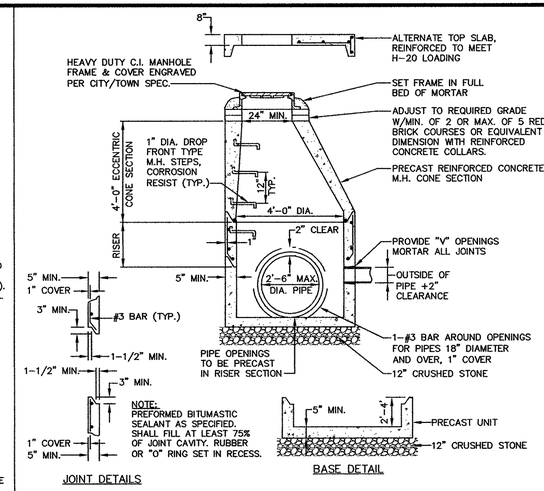

PRECAST CONCRETE DMH

SCALE: NONE

OUTLET NO.	X	Y	Z	STONE DIA. (D50)
FES-1	XXX	XXX	XXX	XXXX
FES-2	XXX	XXX	XXX	XXXX

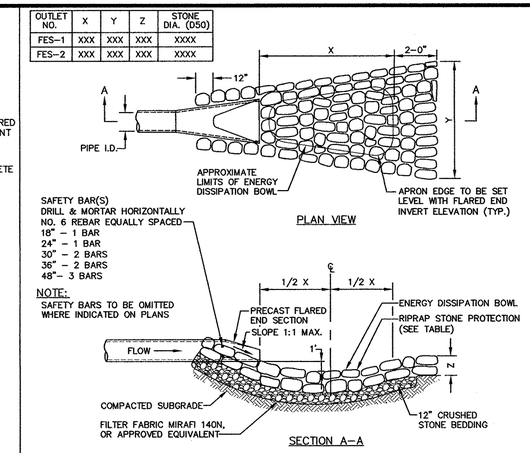

FLARED END SECTION W/ STONE PROTECTION (DISSIPATION BOWL)

SCALE: NONE

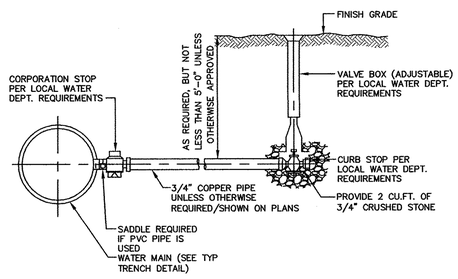

WATER SERVICE CONNECTION

SCALE: NONE

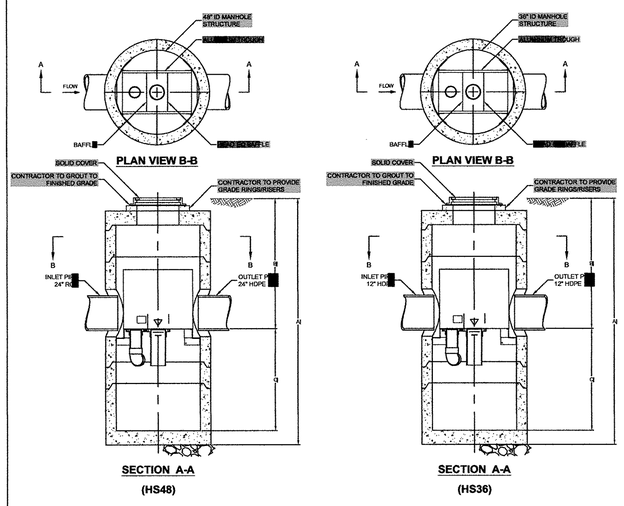

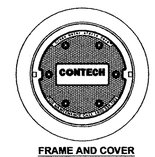

FRAME AND COVER
(DIAMETER VARIES)
N.T.S.

VORTSENTRY HS GENERAL INFORMATION																				
Model	Manhole Diameter (ID)		Total Treatment Flow Rate		Typical Total Distance Rim to Outside Bottom A		Typical Distance Rim to Invert B		Typical Depth Below Invert (inside) C		Approximate Minimum Distance Rim to Invert		Maximum Pipe Diameter (ID)	
	FT	mm	CFS	L/S	FT	m	FT	m	FT	mm	FT	m	IN	mm
HS36	3	900	0.56	15.6	10.16	3.10	4.08	1.24	5.58	1702	3.00	0.91	18	450
HS48	4	1200	1.20	34.0	13.25	4.04	6.00	1.83	6.75	2057	4.00	1.22	24	600
HS60	5	1500	2.20	62.3	15.13	4.61	6.50	1.98	7.96	2426	4.62	1.47	30	750
HS72	6	1800	3.70	104.8	16.56	5.05	6.75	2.06	8.15	2788	5.09	1.79	36	900
HS84	7	2100	5.80	158.6	18.85	5.75	7.75	2.36	10.35	3156	5.00	1.52	42	1050
HS96	8	2400	8.10	229.4	20.87	6.36	8.50	2.59	11.54	3519	6.91	2.11	48	1200

VORTSENTRY TREATMENT UNITS

SCALE: NONE

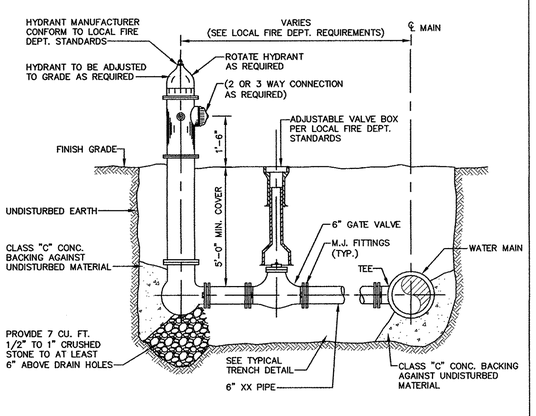

FIRE HYDRANT & VALVE

SCALE: NONE

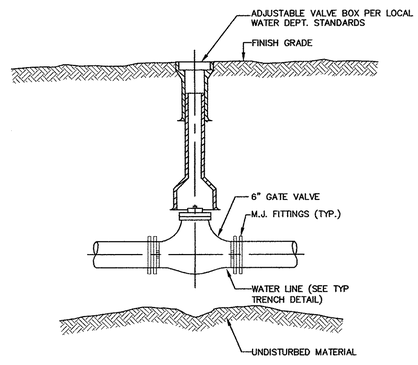

GATE VALVE

SCALE: NONE

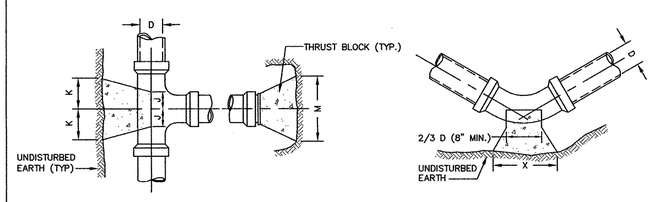

SIZE OF BRANCH	J	K	L	M	N	O
4" THRU 8"	10"	10"	1'–0"	2'–0"	1'–6"	10"
10" THRU 16"	1'–0"	1'–6"	1'–8"	3'–10"	2'–10"	1'–6"
24"	1'–4"	2'–0"	2'–6"	5'–0"	3'–6"	1'–8"

TEES AND PLUGS

	90 & 45 BENDS			22 1/2 & 11 1/4		
D	4"TO8"	10"TO16"	24"	4"TO 8"	10"TO16"	24"
X	1'–8"	3'–4"	3'–6"	1'–4"	2'–0"	3'–6"
Y	1'–2"	1'–8"	2'–4"	1'–0"	1'–2"	2'–4"

BENDS

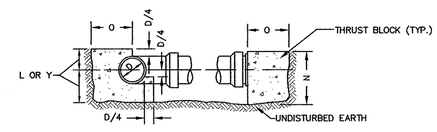

TYPICAL SECTION
TEES, BENDS AND PLUGS

NOTES:

1. PROVIDE 3000 psi CONCRETE THRUST BLOCKS AT ALL BENDS, DEAD ENDS, & TEES UNLESS OTHERWISE DIRECTED. CONCRETE FOR ALL THRUST BLOCKS TO BE PLACED AGAINST FIRM, UNDISTURBED SOIL. PROVIDE APPROVED ANCHOR HARNESS RODS & SOCKET CLAMPS AS SPECIFIED & IN ACCORDANCE WITH PIPE MANUFACTURERS RECOMMENDATIONS WHERE SOIL HAS BEEN DISTURBED OR THRUST BLOCKS CANNOT BE USED, AS DIRECTED BY THE ENGINEER.
2. ALL SOCKET CLAMP METAL SHALL BE COATED WITH BLACK ASPHALTUM OR OTHER WATER DEPARTMENT APPROVED COATINGS.
3. CONCRETE THRUST BLOCKS POURED BEHIND 3-WAY TEE & HYDRANT SHOE TO BE USED WITH SOCKET CLAMPS.
4. NO CONCRETE SHALL COVER PIPE JOINTS, FITTING JOINTS, BOLTS OR HYDRANT DRAINS.

CONCRETE THRUST BLOCK FOR PRESSURE PIPE

SCALE: NONE

COMMONWEALTH OF MASSACHUSETTS
BRIAN G. YERGATIAN
CIVIL
No. 46206
REGISTERED PROFESSIONAL ENGINEER

9/9/15

BRIAN G. YERGATIAN — DATE
PROFESSIONAL ENGINEER

RESIDENTIAL CLUSTER SUBDIVISION

ATKINS ROAD

IN

SANDWICH
MASSACHUSETTS
(BARNSTABLE COUNTY)

DETAILS

FEBRUARY 5, 2014

REVISIONS:

NO.	DATE	DESC.
1	11/25/14	NEW LAYOUT
2	09/09/15	PER CAPE COD COMM.

ISSUED FOR PERMITTING
NOT FOR CONSTRUCTION

PREPARED FOR:
MONOMOY PROPERTIES LLC
79 COVE ROAD
SOUTH DENNIS, MA 02660

BSC GROUP
349 Route 28, Unit D
W. Yarmouth, Massachusetts
02673
508 778 8919

© 2014 BSC Group, Inc.

SCALE: AS NOTED

FILE: 4967500–DET.dwg
DWG. NO:
JOB. NO: 4–9675.00
SHEET 12 OF 13